SiC UV Sensor Solutions




- **Robust SiC and AlGaN photodiodes in hermetic TO-style packages**
- **Integrated detector/preamplifer solutions - TOCONs**
- **Hardened UV probes for high reliability and extreme environments**
- **Accessories, calibration services, UV-Index measuring**
- **UV lamp monitoring**

sglux
The UV Experts

BostonElectronics

91 Boylston Street, Brookline, MA 02445
tel: (617)566-3821 fax: (617)731-0935
www.boselec.com boselec@boselec.com

UV Solutions from Boston Electronics and sglux

Thank you for your interest in our **UV detection solutions**. In this catalog, you will find dedicated sections describing the full breadth of **sglux'** product offerings. In this catalog you will find discussions on the applications, tutorials on the technology and UV measurements, and information on sensor selection. The enclosed information should allow you to appropriately select the sensor you need for your specific application.

Sections:

- SiC UV Photodiodes
- UV TOCONS
- UV Probes
- Displays
- UV Calibration
- UV Spectrometer
- UV-Index Measurement

If you wish to look at a specific data sheet, please go to our website. Also, do not hesitate to contact our applications staff so that they can answer any questions you have, and provide a quotation.

If you also have a need for **UV Light Emitting Diodes (UV LEDs)** please see our web site. We carry high performance, affordable solutions from **Nikkiso**.

SiC UV Photodiodes

- **Robust SiC and AlGaN photodiodes in hermetic TO-style packages**
- **UV lamp monitoring**

sglux
The UV Experts

BostonElectronics

91 Boylston Street, Brookline, MA 02445
tel: (617)566-3821 fax: (617)731-0935
www.boselec.com boselec@boselec.com

SiC UV Photodiodes

Catalog

sglux
The UV Experts

SIC UV PHOTODIODES

Content

- General information about the sglux SiC UV photodiodes **p. 1**
- An overview at the portfolio that ranges from 0.06 mm² until 36.00 mm² active area photodiodes with different housings, simple optics filtered for UVA, UVB, UVC or UV-Index spectral response **p. 2**
- Tutorial to answer beginners and users questions about best use of SiC UV photodiodes **p. 3**
- List of publications **p. 17**

GENERAL INFORMATION

about the sglux SiC UV photodiodes

About the material SiC

Applications that require UV photodiodes differ widely in required detector properties as well as in spectral and absolute sensitivity. In the field of flame detection very low radiation intensity must be reliably detected. The monitoring of UV purification lamps needs UV photodiodes that will operate in high UV brightness without degradation for many years. Monitoring of very powerful UV radiation emitted by UV curing lamps or LED arrays requires UV photodiodes that endure extreme UV radiation intensity. Monitoring the sun's UV, in particular the erythemal part of the sunlight requires photodiodes with perfect visible blindness and carefully tailored spectral response in the UV region.
Customers that apply Silicon Carbide UV photodiodes to these applications make the best choice within all these application variables. They profit from the very low dark current, near perfect visible blindness, bullet proof radiation hardness and low temperature coefficient of the signal, 0.1%/K. Operating temperature range is up to 170°C.

Our own SiC wafer production since 2009

Since 2009 sglux has produced its own SiC photodiodes, multielement linear SiC spectrometer arrays and SiC-quadrant chips. The sglux R&D team has almost 20 years of experience in producing UV sensitive semiconductor chips. This skill powered the SiC R&D work focusing on extreme radiation hardness. The German PTB in 2011 measured that the radiation hardness of the sglux SiC UV chips has improved by factor of two compared to 1st generation SiC, sensing chips produced by Cree, Inc. until 2007. Furthermore the visible blindness of the sglux chips was improved by five orders of magnitude compared with Cree SiC chips and now totals more than ten orders of magnitude of visible blindness. Please also refer to our list of publications (p. 17) of this catalog.

Photodiode amplification

In order to benefit from the superior properties of SiC UV photodiodes, carefully designed and produced amplifiers made of superior components are needed. Page 15 informs users about how to assemble and adjust such amplifiers. We support developers with a broad selection of ready-to-use amplifier modules. The sglux TOCON series are hybrid photodetectors in a TO5 housing that include such an amplifier stage and output a voltage of 0 to 5V. Please find more information about the TOCONs and the amplifiers at the sglux web-page.

SiC UV Photodiodes

Catalog

sglux
The UV Experts

OVERVIEW AT THE PORTFOLIO

that ranges from 0.06 mm² until 36.00 mm² active area photodiodes with different housings, simple optics filtered for UVA, UVB, UVC or UV-Index spectral response

Nomenclature

The UV photodiodes follow the below nomenclature. All part numbers start with SG01 indicating a sglux SiC UV photodiode. The following table shows the selection opportunities:

SG01

S, M, D, L, F, XL	– nothing, A, B, C or E	18, 18ISO90, 18S, 5, 18ISO90S, 5ISO90	nothing, Lens, MEGA, GIGA, DIFFUSOR
Chip area	**Spectral response**	**Housing**	**Special**
S 0.06 mm²	**nothing = broad band UV** λ_{max} = 280 nm $\lambda_{s10\%}$ = 221 nm ... 358 nm	**18** 2-pin TO18 housing, h = 5.2 mm, 1 pin isolated, 1 pin grounded	**Lens** with concentrating lens, TO5 only
M 0.20 mm²	**A = UVA** λ_{max} = 331 nm $\lambda_{s10\%}$ = 309 nm ... 367 nm	**18ISO90** 3-pin TO18 housing, h = 5.2 mm, 2 pins isolated, 1 pin grounded	**MEGA** with altenuator up to 0.5 W/cm²
D 0.50 mm²	**B = UVB** s_{max} = 280 nm $\lambda_{s10\%}$ = 231 nm ... 309 nm	**18S** 2-pin TO18 housing, h = 3.7 mm, 1 pin isolated, 1 pin grounded	**GIGA** with altenuator up to 7 W/cm²
L 1.00 mm²	**C = UVC** s_{max} = 275 nm $\lambda_{s10\%}$ = 225 nm ... 287 nm	**5** 2-pin TO5 housing, h = 4.3 mm for broadband; h = 6.7 mm for filtered UVA, UVB, UVC, UVI	**DIFFUSOR** with anorganic diffusor for cosine correction
F 1.82 mm²	**E = UV-Index** spectral response according to CIE087	**18ISO90S** 3-pin TO18 housing, h = 3.7 mm, 2 pins isolated, 1 pin grounded	
XL 7.60 mm²		**5ISO90** 3-pin TO5 housing, h = 4.2 mm, 2 pins isolated, 1 pin grounded	

Further information

- use our interactive SiC UV photodiode finder: www.sglux.de/en/product-configurator
- call us +49 30 53015211 or send us an email: welcome@sglux.com
- study the background information shown at the following pages of this catalog

SiC UV Photodiodes

Catalog

sglux
The UV Experts

TUTORIAL

to answer beginners and users questions about best use of SiC UV photodiodes

General information about the sglux SiC UV photodiodes

- About the material SiC **p. 1**
- sglux inhouse SiC wafer production since 2009 **p. 1**
- Photodiode amplification **p. 1**

Overview at the portfolio that ranges from 0.06 mm² until 36.00 mm² active area photodiodes with different housings, simple optics filtered for UVA, UVB, UVC or UV-Index spectral response **p. 2**

- Nomenclature **p. 2**

Tutorial to answer beginners and users questions about best use of SiC UV photodiodes

1.0 Selection of the chip active area (photocurrent limits) **p. 4**
- 1.1 Problems with current too low **p. 5**
- 1.2 Problems with current too high **p. 6**
- 1.3 Calculation of the relation between UV radiation and photocurrent **p. 7**

2.0 Selection of the spectral response **p. 9**
- 2.1 Unfiltered SiC **p. 10**
- 2.2 Filtered SiC **p. 11**

3.0 Packaging features **p. 12**
- 3.1 Overview **p. 12**
- 3.2 Drawings **p. 13**

4.0 Special features **p. 15**
- Appendix A Photodiode amplification notes **p. 15**
- Upgrade to a TOCON or a PROBE **p. 16**

List of publications **p. 17**

1.0 Selection of the chip active area (photocurrent limits)

The chip active area determines how many photons can be collected by a photodetector. Semiconductor detectors, such as SiC UV photodiodes, convert photons into an electrical current, the *photocurrent I*. This photocurrent rises linearly with the irradiation power and the chip active area. sglux produces seven different area sizes:

A_1 = 0.06 mm² (S-type)
A_2 = 0.20 mm² (M-type)
A_3 = 0.50 mm² (D-type)
A_4 = 1.00 mm² (L-type)
A_5 = 1.82 mm² (F-type)
A_5 = 7.60 mm² (XL-type)
A_6 = 36 mm² (XXL-type)

As the detector price rises with increasing active area, the area selection basically is a compromise between costs and current.

If you know the minimum and maximum irradiance you like to measure with the UV photodiode the following simplified formula (1) shows a rough estimation of the photocurrent *I* given a particular chip active area A_{Chip}.

$$I = A_{chip} * E_{\lambda} * 1.000 \qquad (1)$$

where *I* is the photocurrent in nA, A_{chip} *is the chip active area in mm²* (enter values of 0.06 or 0.2 or 0.5 or 1 or 1.82, 7.6 or 36) and E_{λ} is the spectral irradiance of the UV light source you like to measure in $mWcm^{-2}nm^{-1}$. You may find more information about photocurrent calculation in chapter 1.3 (Calculation of the relation between UV radiation and photocurrent), p. 7.

If you do not know the irradiance coming from your UV light source chapter 1. section 1.3 gives some examples of common UV sources.

The minimum current (photodiode output at lowest irradiance to be measured) should not fall below 500pA. The maximum current must not exceed 400mA if the component's diode properties are to be maintained. Please refer to a detailed discussion on suitable minimum and maximum currents in the following chapters 1. section 1.1 (Problems with current too low) and 1. section 1.2 (Problems with current too high). These chapters assume a certain basic knowledge in photodiode amplifier circuits. If you are not familiar with circuits please see Appendix A (Photodiode Amplification Notes) at p. 15.

1.1 Problems with current too low

If the current is too low, one ore more of the following problems (P_1 – P_4) may affect the measurement:

P_1 ⇢ The measurement signal comes too close to the UV photodiode dark current

P_2 ⇢ High resistance feedback resistors (R_f) must be used which causes temperature drift and non linearity problems

P_3 ⇢ Speed problems

P_4 ⇢ Risk of electromagnetic interferences

Using SiC, P_1 can be neglected due to the extremely low dark current of the sglux 4H SiC UV photodiodes of only some fA. P_2 (temperature drift and non linearity) becomes essential from values R_f > 10 GΩ. Therefore, the photocurrent I should be strong enough to allow R_f values of ≤ 10 GΩ. The relation between I and R_f is given by Ohm's law:

$$I = U_{supply} / R_f \qquad (2)$$

where U_{supply} is the supply voltage of the used transimpedance amplifier. A typical value is 5.00 V. Formula (2) calculates:

$$I_{min} = 5.00\text{V}/10\ \text{G}\Omega = 500\text{pA} \qquad (3)$$

If a higher speed measurement is needed P_3 (speed problems) could become an issue. As the SiC UV photodiode's detection speed is extremely high (in nanoseconds only) the amplifier speed (rise time) determines the circuit's speed. The amplifier rise time is calculated with the following formula:

$$\tau = R_f * C_f \qquad (4)$$

where C_f is the feedback capacitor value which should not be lower than 0.1 nF. A lower C_f risks hitting the circuit's resonance. Using a C_f = 0.1 nF and a R_f = 10 GΩ the rise time is calculated as follows:

$$\tau = 10\ \text{G}\Omega * 0.1\ \text{nF} = 1\ \text{second} \qquad (5)$$

Formula (5) shows that using a R_f = 10 GΩ the circuit becomes very slow. If a higher speed is needed the photocurrent I must be increased to allow a decrease in the R_f value. This can be done by increasing the UV radiation or, if that is not feasible, by increasing the chip active area.
The last problem (P_4) that can be caused with too low photocurrent (= due to too small an active area) is complications from electromagnetic interferences. This is a general issue. Decreasing photocurrents call for increasing shielding efforts which then increases the system price of the product. If the radiation (and thus the current) is low one should consider using a sglux TOCON amplified hybrid UV sensor.

Conclusion of needed minimum photocurrent I_{min}

To achieve a stable temperature and linear photodiode-amplifier system the lowest measurement current I_{min} should be higher than 500pA. If a high speed measuring circuit is needed I_{min} is calculated by the following formula:

$$I_{min} = U_{supply} * C_f * \tau^{-1} \qquad (6)$$

With U_{supply} = 5.00V (typical value), C_f = 0.1nF (recommended value) and R_f = 10 GΩ (lowest recommended value) the formula reduces to:

$$I_{min} = 500 * \tau^{-1} \qquad (7)$$

where I_{min} results in nanoamperes (nA) and τ must be in milliseconds.

In general, given these reasons, a decreasing photocurrent needs a more advanced amplifier design and better shielding. If you are not familiar with low current circuit development you should consider selecting a higher current (and thus larger active area) photodiode even if the price of a photodiode is higher. This strategy will provide conservative results and the initial increased financial cost will save you money in the long run.

1.2 Problems with current too high

In the previous pages we discussed the calculation of a minimum recommended photodiode current. It also should be mentioned that aside from the photocurrent being too low too high of a current may cause problems as well due to saturation effects. The saturation current I_{sat} of a photodiode is the current limit from which the output of a photodiode turns to arbitrary values. It is determined by the photodiode's open circuit voltage V_{OC} and its serial resistance R_S following the formula below:

$$I_{sat} = V_{OC} / R_S \qquad (8)$$

A typical value (SiC photodiode) for V_{OC} is 2.0V and for R_S = 5Ω. The calculation is a follows:

$$I_{sat} = 2.0\ V / 5\ \Omega = 400mA.$$

The needed minimum current (500 pA) is higher than the saturation current is higher by six orders of magnitude. Reaching the saturation limit of a SiC photodiode is therefore very unlikely.

1.3 Calculation of the relation between UV radiation and photocurrent

The photocurrent *I* is calculated by the following formula:

$$I = \int_{200\,nm}^{400nm} A_{chip} * S_{chip}(\lambda) * E_{source}(\lambda) d\lambda \qquad (9)$$

where *I* is the photocurrent in A, A_{chip} *is the chip active area in* m^2. S_{chip} is the chip's spectral sensitivity in AW^{-1} and E_λ is the spectral irradiance of the UV light source in $Wm^{-2}nm^{-1}$. Due to extreme visible and IR blindness (13 orders of magnitude) the integral value from 400nm to ∞ can be neglected even if $E_{source}(\lambda)$ is very strong. To get a rough estimate of the photocurrent generated by a certain irradiance a simplification of (9) leads to (10). That simplification assumes that the chip's spectral sensitivity *S* and the UV source's irradiance *E* is a constant value and does not depend on wavelength. The calculation is:

$$I = A_{chip} * S_{chip} * E_\lambda * 10.000 \qquad (10)$$

where *I* is the photocurrent in nA, A_{chip} *is the chip active area in* mm^2. S_{chip} is the chip's spectral sensitivity in $AW^{-1}nm^{-1}$ and E_λ is the spectral irradiance of the UV light source in $mWcm^{-2}nm^{-1}$.

A typical value of S_{chip} *is 0.1 A/W*. For further refinement please refer to the spectral response graph of the UV photodiode you are interested in (see Datasheet) or have a look at chapter 2.0 (Selection of the spectral response, p. 9) of this guide.

If you know the spectral irradiance range, (minimal and maximal values), of the UV light source and you would like to measure you can easily estimate the photocurrent *I* by using formula (10) and hence select a chip active area (S-, M-, D-, L-, F-, XL- or XXL-type) that guarantees that your minimum radiation generates a photocurrent of more than 500 pA. The following table lists some common UV applications / light sources with their spectral irradiances at peak. Please note that some simplifications apply; thus the table gives a rough estimation of photocurrents for the different UV source types and different chip active areas.

SiC UV Photodiodes

Catalog

sglux
The UV Experts

	TYP. PEAK E_λ	S-TYPE I	M-TYPE I	D-TYPE I	L-TYPE I	F-TYPE I	XL-TYPE I
lacquer hardening Fe doped HG medium pressure lamp or LED	10 W/cm²	**600 µA**	2 mA	5 mA	10 mA	18 mA	40 mA
UV sterilisation low or medium pressure HG lamp	10 mW/cm²	**600 nA**	2 µA	5 µA	10 µA	18 µA	40 µA
Other sources various sources	10 µW/cm² – 1 mW/cm²	0.6 – **40 nA**	**2 – 200 nA**	**5 – 500 nA**	**10 – 1000 nA**	**18 – 1800 nA**	**40 – 4000 nA**
UV-Index sun	10 µW/cm²	600 pA	**2 nA**	**5 nA**	**10 nA**	**18 nA**	**40 nA**
Burner flame detection gas or oil flame	10 nW/cm²	600 fA	2 pA **100 pA with "LENS" feature or use a TOCON**	5 pA **250 pA with "LENS" feature or use a TOCON**	10 pA **500 pA with "LENS" feature or use a TOCON**	18 pA **900 pA with "LENS" feature or use a TOCON**	40 pA

Comments:

- **Lacquer hardening**

S-chip is best. M, D, L, F, XL chips would work but are not needed.

- **UV sterilisation**

S-chip is best. M, D, L, F, XL chips would work but are not needed.

- **Other sources**

All chips are suited. Speed is the main consideration when selecting a chip being mindful of linearity and temperature dependence values. Please contact us for further refinement.

• UV-Index

S-Chips are too small for this application. All other chips can be applied. The reliability increases with increasing chip active area. Due to very low current the use of a TOCON (amplified hybrid sensor) should be considered.

• Burner flame detection

All chips are too small for this type of detection. A burner flame can be detected with the photodiode „SG01M-5Lens“ or “SG01D-5Lens” or “SG01L-5Lens” or “SG01F-5Lens”. This sensor works with a concentrating lens. Alternatively the photodiode SG01F-5ISO90 (1.82 mm^2 active area) can be applied. However, this photodiode needs an external concentrator lens. Please refer to chapter 4.0. (Special features), for more information. Another approach is to use a sglux TOCON_ABC1 sensor with its included amplifier. The TOCON_ABC1 converts 0-18 nW/cm^2 radiation into a 0-5 V output voltage.

2.0 Selection of the spectral response

This chapter assists in the selection of a spectral response profile best suited for the measurement. All sglux 4H SiC UV photodiodes provide an extreme visible/IR blindness of more than ten orders of magnitude. That means that the UV photodiodes reliably only measure the UV part of a radiation spectrum (and not the visible and/or infrared part), even if visible light or infrared radiation is strongly present. This is a unique feature of the semiconductor material SiC. Currently no other material provides that extreme visible blindness.

2.1 Unfiltered SiC

The following graph shows the spectral curve of an unfiltered 4H SiC UV photodiode.

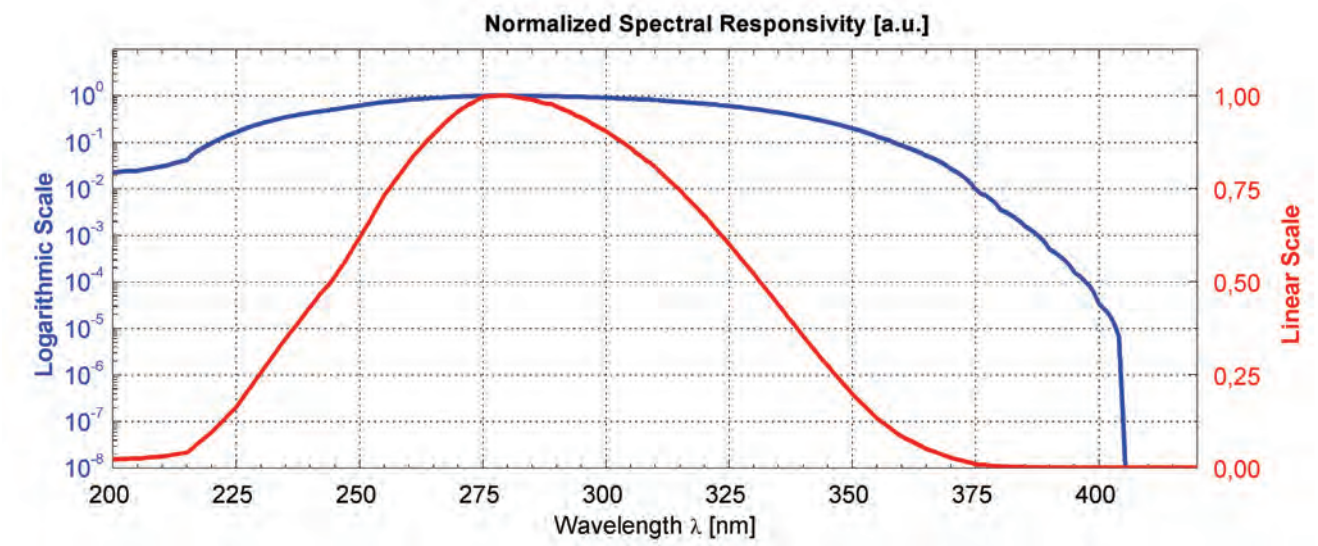

The curve's maximum is at approximately 280 nm. The response falls down to 10% of maximum at 221 nm, (UVC edge) and 358 nm, (UVA edge). Unfiltered SiC is the standard application and can be used for any UV measurements where the whole UV band needs to be measured or a quasi monochromatic UV source (such as low pressure lamps) is controlled.

2.2 Filtered SiC

Some applications require measurement of one particular part of the UV radiation spectrum, and it is essential that other UV radiation parts do not contribute to the photodiode's current. This requirement usually arises from standards as DVGW W294/2006 or CIE087 (UV-Index) etc. Other applications for filtered photodiodes are UVA-UVB-UVC selective sensor probes. sglux produces four different filtered SiC UV photodiode types.

- UVA (max = 331 nm)
- UVB (max = 280 nm)
- UVC (max = 275 nm)
- UV-Index (following CIE087 curve)

The following graph shows the four different spectra.

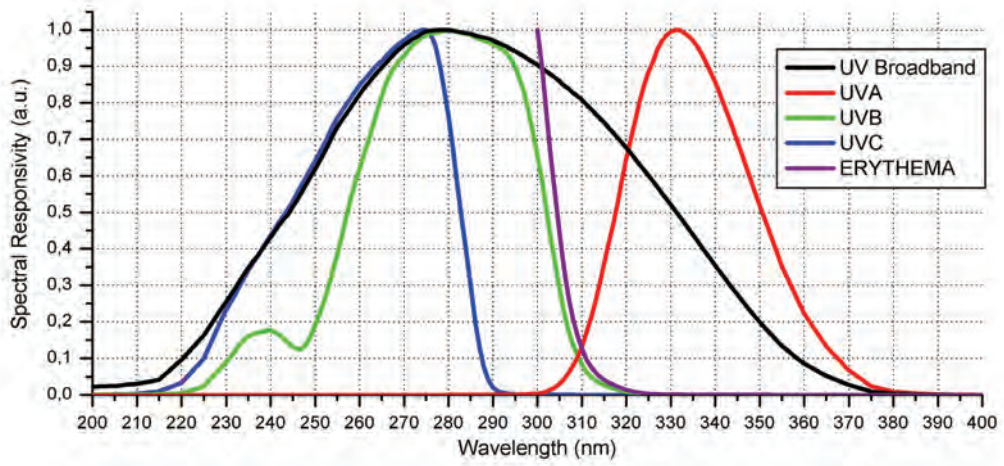

The graph assigns the filtered photodiode's spectral response to an individual wavelength. The following table extracts the most important specifications.

	WAVELENGTH of max.	SENSITIVITY at max.	WAVELENGTH 10% left side	WAVELENGTH 10% right side	VISIBLE BLINDNESS
no filter (broadband UV)	280 nm	0.130 A/W	221 nm	358 nm	$>10^{10}$
UVA	331 nm	0.037 A/W	309 nm	367 nm	$>10^{10}$
UVB	280 nm	0.125 A/W	231 nm	309 nm	$>10^{10}$
UVC	275 nm	0.120 A/W	225 nm	287 nm	$>10^{10}$
ERYTHEMA	280 nm	0.125 A/W	–	310 nm	$>10^{10}$

Other spectral specifications are available on request.

3.0 Packaging features

All sglux SiC UV photodiodes use a hermetically sealed melted window metal package. Each photodiode is gross and fine leak tested before sales. Two different sizes, (TO18 and TO5), with corresponding different heights and pin terminals are offered.

The reason for the different packaging types are technical in nature, (field of view, electrically floating housing, etc.) or just to allow the replacement of a previously applied photodiode by keeping the geometric parameters (footprint).

3.1 Overview

SAMPLE PICTURE	SELECTION CODE	DESCRIPTION
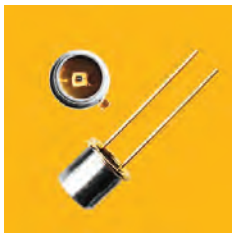	18	TO18 Ni plated housing, 5.5 mm diameter, 5.2 mm height two gold plated pins (Anode grounded and Cathode isolated).
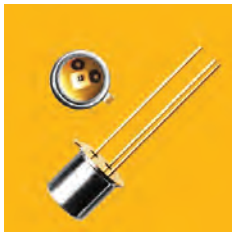	18ISO90	TO18 Ni plated housing, 5.5 mm diameter, 5.2 mm height three gold plated pins (Anode and Cathode isolated, additional third pin for optional grounding of the body).
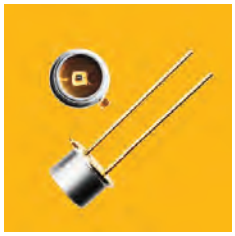	18S	TO18 Ni plated short housing, 5.5 mm diameter, 3.7 mm height two gold plated pins (Anode grounded and Cathode isolated). Not available with filters.
	5	TO5 Ni plated housing, 9.2 mm diameter, 4.3 mm height (unfiltered photodiodes), 6.7 mm height (filtered photodiodes), two gold plated pins (Anode grounded and Cathode isolated).
	5ISO90	TO5 Ni plated housing, 9.2 mm diameter, 4.2 mm height (unfiltered photodiodes), 6.7 mm height (filtered photodiodes), three gold plated pins (Anode and Cathode isolated, additional third pin for optional grounding of the body).

3.2 Drawings

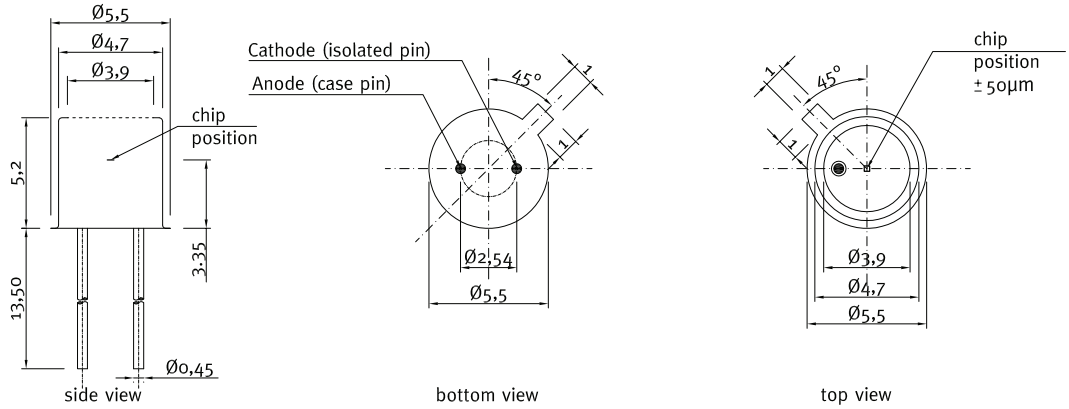

Selection code “18” ⇢ TO18 Ni plated housing, 5.5 mm diameter, 5.2 mm height two gold plated pins (Anode grounded and Cathode isolated).

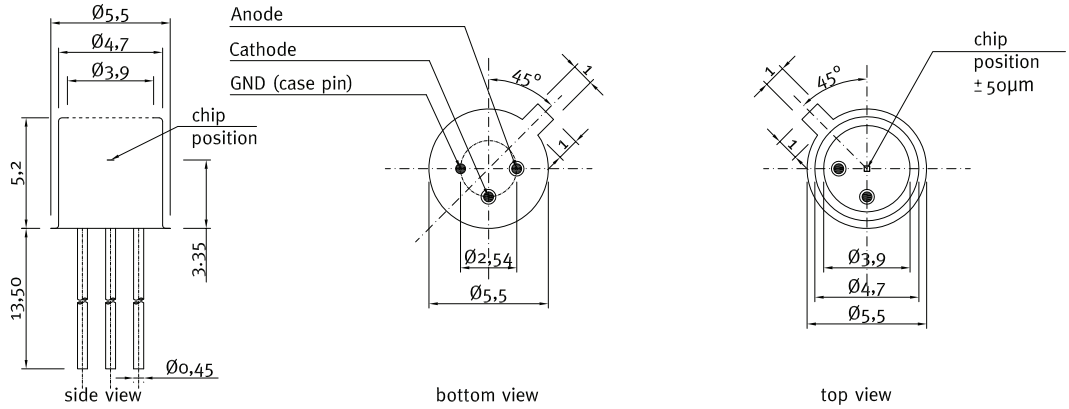

Selection code “18ISO90” ⇢ TO18 Ni plated housing, 5.5 mm diameter, 5.2 mm height three gold plated pins (Anode and Cathode isolated, additional third pin for optional grounding of the body).

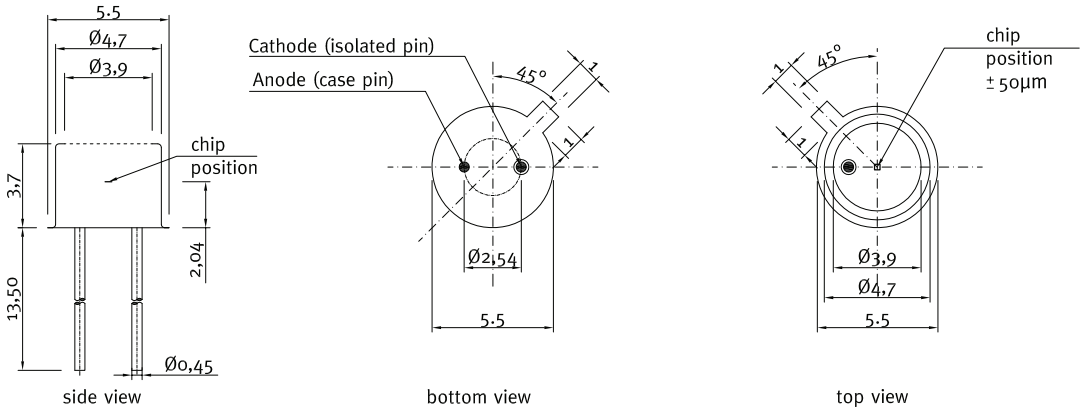

Selection code “18S” ⇢ TO18 Ni plated short housing, 5.5 mm diameter, 3.7 mm height two gold plated pins (Anode grounded and Cathode isolated). Not available with filters.

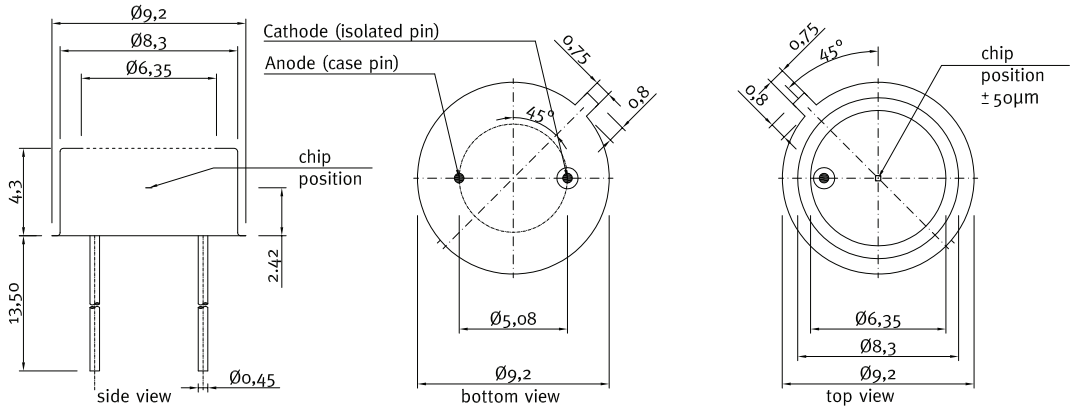

Selection Code "5" (photodiodes without filters) ⇢ TO5 Ni plated housing, 9.2 mm diameter, 4.3 mm height, two gold plated pins (Anode grounded and Cathode isolated).

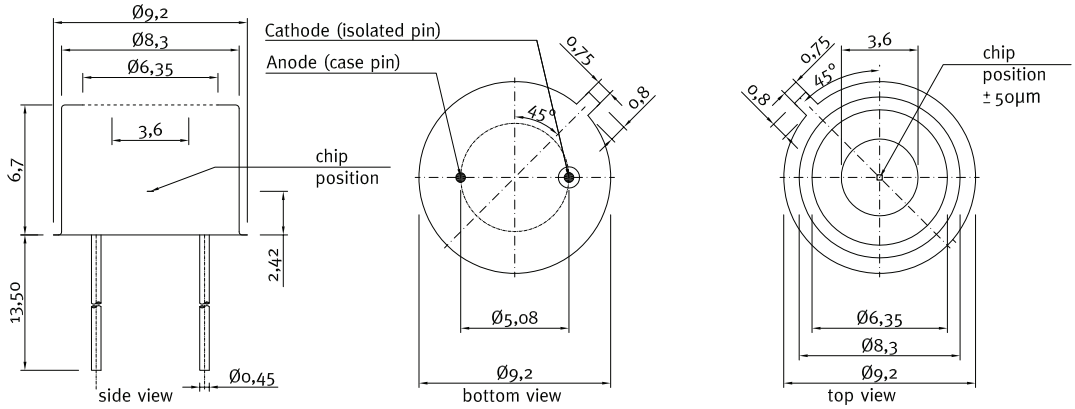

Selection Code "5" (photodiodes with filters) ⇢ TO5 Ni plated housing, 9.2 mm diameter, 6.7 mm height, two gold plated pins (Anode grounded and Cathode isolated).

Suitable SOCKETS available from ANDON Electronics. See R197-0403-01T-xxx-R27-L14- and R100-0402-06T-xxx-R27-L14 types.

4.0 Special features

Besides the three main selection criteria chip active area, spectral response and packaging details some special features can be added to the photodiode's properties. These special features are useful if the UV radiation is extremely high or low or if a cosine FOV is needed. The below table shows the selectable special features.

SELECTION CODE	DESCRIPTION
Lens	 Concentrating lens creating a virtual active area of 55 * real active area. This approximately multiplies the current by factor 55 while using the same chip active area. A disadvantage is a strongly reduced field of view compared with the flat window type.
MEGA	special attenuated photodiode for very strong UV radiation up to 0.5 W/cm²
GIGA	special attenuated photodiode for extreme UV radiation up to 7 W/cm²
DIFFUSOR	with anorganic diffusor for cosine correction

Appendix A – Photodiode amplification notes

For a correct reading of the photodiode the current (and not the voltage) must be analyzed. This requires a short circuiting of the photodiode. Usual approaches are using a Picoamperemeter e.g. produced by Keithley or a *transimpedance amplifier* circuit as shown below.

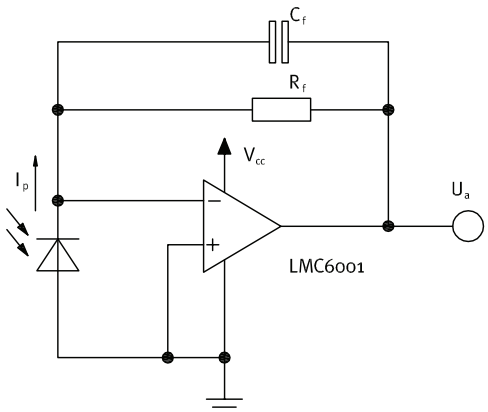

Calculations and Limits:

$U_a = I_p \times R_f = 0 \ldots \sim V_{cc}$

$U_{a,max}$ depends on load and amplifier type

$R_f = 10k\Omega \ldots \sim 10G\Omega$, $C_f \geq 3pF$
Recommendation: $R_f \times C_f \geq 10^{-3}s$
$I_{p,max} = U_{a,max} \div R_f$

Bandwidth = DC ... $\frac{1}{2\pi \times R_f \times C_f}$

Example:
$I_p = 20nA$, $R_f = 100M\Omega$, $C_f = 100$ pF
$U_a = 20 \times 10^{9}A \times 100 \times 10^{6}\Omega = 2V$

The adjacent design gives an example of a simple amplifier circuit. At the left side the photodiode is shown. The upper connection is the cathode (isolated pin of the photodiode) and the lower connection is the anode (usually grounded pin of the photodiode).

We recommend using a Texas Instruments LMC6001 transimpedance amplifier.

SiC UV Photodiodes

Catalog

sglux
The UV Experts

Upgrade to a TOCON or a PROBE

TOCONs = UV sensors with integrated amplifier

- SiC based UV hybrid detector with amplifier (0-5V output), no additional amplifier needed, direct connection to controller, voltmeter, etc.
- Measures intensities from 1,8 pW/cm² up to 18 W/cm²
- UV broadband, UVA, UVB, UVC, Erythema measurements, blue and blue+VIS
- Different upgrades such as a M12x1 housing available

Miniature housing with M12x1 thread for the TOCON series

- Miniature housing with M12x1 thread for the TOCON series
- Optional feature for all TOCON detectors
- Robust stainless steel M12x1 thread body
- Integrated sensor connector (Binder 5-Pin plug) with 2m connector cable
- Easy to mount and connect

UV probes

- Different housings e.g. with cosine response, water pressure proof or sapphire windows
- Different electronic outputs configurable (voltage, current, USB, CAN, LAN)
- Good EMC safety

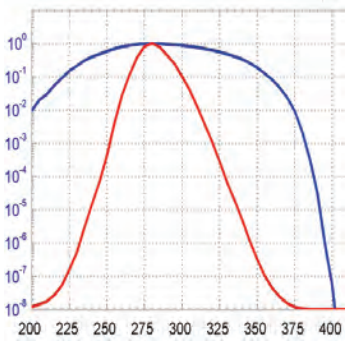

Calibration service

- Different NIST and PTB traceable calibrations and measurements for all sglux sensors
- Calibration of sensors for irradiation measurements
- Calibration of UV sensors on discrete wavelengths
- Determination of a specific spectral sensor responsivity

LIST OF PUBLICATIONS

P. Sperfeld[1], B. Barton[1], S. Pape[1], A. Towara[1], J. Eggers[2], G. Hopfenmueller[3]
[1]Physikalisch-Technische Bundesanstalt Braunschweig und Berlin (PTB), Germany, [2]DVGW-Technologiezentrum Wasser, Karlsruhe, Germany, [3]sglux GmbH, Berlin, Germany
„Spectral irradiance measurement and actinic radiometer calibration for UV water disinfection“ Metrologia, Issue 51 (2014), *p. 282-288*.

P. Sperfeld[1], B. Barton[1], S. Pape[1], A. Towara[1], J. Eggers[2], G. Hopfenmueller[3]
[1]Physikalisch-Technische Bundesanstalt Braunschweig and Berlin (PTB), Germany, [2]DVGW-Technologiezentrum Wasser, Karlsruhe, Germany, [3]sglux GmbH, Berlin, Germany
„Spectral Irradiance Measurement and Actinic Radiometer Calibration for UV Water Disinfection Proceedings of NEWRAD 2014, edited by S. Park, P. Kaerhae and E. Ikonen. (Aalto University, Espoo, Finland 2014) *p. 128.*

B. Barton[1], P. Sperfeld[1], A. Towara[1], G. Hopfenmueller[2]
[1]Physikalisch-Technische Bundesanstalt Braunschweig und Berlin (PTB), 4.1 Photometry and Applied Radiometry, Braunschweig, Germany, [2]sglux GmbH, Berlin, Germany
„Developing and setting up a calibration facility for UV sensors at high irradiance rates EMEA Regional Conference, Karlsruhe, Germany (2013)

P. Sperfeld[1], B. Barton[1], S. Pape[1], G. Hopfenmueller[2]
[1]Physikalisch-Technische Bundesanstalt Braunschweig und Berlin (PTB), 4.1 Photometry and Applied Radiometry, Braunschweig, Germany, [2]sglux GmbH, Berlin, Germany
„Traceable spectral irradiance measurements at UV water disinfection facilities EMEA Regional Conference, Karlsruhe, Germany (2013)

G. Hopfenmueller[1], T.Weiss[1], B. Barton[2], P. Sperfeld[2], S. Nowy[2], S. Pape[2], D. Friedrich[2], S. Winter[2], A. Towara[2], A. Hoepe[2], S. Teichert[2]
[1]sglux GmbH, Berlin, Germany, [2]Physikalisch-Technische Bundesanstalt Braunschweig und Berlin (PTB), 4.1 Photometry and Applied Radiometry, Braunschweig, Germany
„PTB traceable calibrated reference UV radiometer for measurements at high irradiance medium pressure mercury discharge lamps EMEA Regional Conference, Karlsruhe, Germany (2013)

D. Prasai[1], W. John[1], L. Weixelbaum[1], O. Krueger[1] G. Wagner[2], P. Sperfeld[3], S. Nowy[3], D. Friedrich[3], S. Winter[3] and T. Weiss[4]
[1]Ferdinand-Braun-Institut, Leibniz-Institut fuer Hoechstfrequenztechnik, Berlin, Germany, [2]Leibniz-Institut fuer Kristallzuechtung, Berlin, Germany, [3]Physikalisch-Technische Bundesanstalt Braunschweig und Berlin (PTB), 4.1 Photometry and Applied Radiometry, Braunschweig, Germany, [4]sglux GmbH, Berlin, Germany
„Highly reliable silicon carbide photodiodes for visible-blind ultraviolet detector applications J. Mater. Res., first view (2012)
Copyright © Materials Research Society 2012. Personal use of this material is permitted. However, permission to reprint/republish this material for advertising or promotional purposes or for creating new collective works for resale or redistribution to servers or lists, or to reuse any copyrighted component of this work in other works must be obtained from the Cambridge University Press.

S. Nowy[1], B. Barton[1], S. Pape[1], P. Sperfeld[1], D. Friedrich[1], S. Winter[1], G. Hopfenmueller[2], and T. Weiss[2]
[1]Physikalisch-Technische Bundesanstalt Braunschweig und Berlin (PTB), 4.1 Photometry and Applied Radiometry, Braunschweig, Germany, [2]sglux GmbH, Berlin, Germany
„Characterization of SiC photodiodes for high irradiance UV radiometers Proceedings of NEWRAD 2011, edited by S. Park and E. Ikonen. (Aalto University, Espoo, Finland, 2011) *p. 203.*

B. Barton[1], P. Sperfeld[1], S. Nowy[1], A. Towara[1], A. Hoepe[1], S. Teichert[1], G. Hopfenmueller[2], M. Baer[3], and T. Kreuzberger[3]
[1]Physikalisch-Technische Bundesanstalt Braunschweig und Berlin (PTB), 4.1 Photometry and Applied Radiometry, Braunschweig, Germany, [2]sglux GmbH, Berlin, Germany, [3]SGIL Silicaglas GmbH, Langewiesen, Germany
„Characterization of new optical diffusers used in high irradiance UV radiometers Proceedings of NEWRAD 2011, edited by S. Park and E. Ikonen. (Aalto University, Espoo, Finland, 2011) p. 278.1.

Ultraviolet (UV) TOCONS

- **SiC based UV sensors with 0 to 5 V voltage output**
- **measures intensities from 1.8pW/cm² up to 18W/cm²**
- **Broadband UV sensitivity or filtered for UVA, UVB, UVC or UV-Index spectral response**
- **GaP-chip based series for blue light hazard measurement**

sglux
The UV Experts

BostonElectronics

91 Boylston Street, Brookline, MA 02445
tel: (617)566-3821 fax: (617)731-0935
www.boselec.com boselec@boselec.com

TOCON

Catalog

sglux
The UV Experts

TOCONS

Content of this Catalog

General information about the sglux TOCONs **p. 1**

Selection guide **p. 2**

Product details of all TOCONs **p. 5**

Useful accessories **p. 9**

List of publications **p. 10**

GENERAL INFORMATION ABOUT THE SGLUX TOCONS

What is a TOCON?

A TOCON is a UV photodetector that contains a SiC or a GaP detector chip and an amplifier circuit that outputs a voltage of 0 to 5V. This output voltage is linear in proportion to the UV radiation intensity reaching the SiC chip. Compared with a bare UV photodiode the TOCON's big advantage is the amplifier's position inside the TO5 metal housing and its close proximity to the detector. This construction protects the usually very low current levels generated by the detector chip from electromagnetic interference and also from moisture and pollution induced disturbances. A point to be considered of the TOCON is the lower dynamic range (approx. 3 orders of magnitude) compared with a SiC UV photodiode (10 orders of magnitude). To overdome this disadvantage we offer each TOCON type in many different amplification levels to avoid saturation and too low voltage output levels for nearly all applications. Please consult the selection guide on page 2 for assistance selecting the best suited TOCON.

About the material SiC

Most of the TOCONs are based on Silicon Carbide (SiC). Applications that require UV photodiodes differ widely in both required detector properties as well as spectral and absolute sensitivity. In the field of flame detection very low radiation intensity must be reliably detected. The monitoring of UV purification lamps needs UV photodiodes without degradation for many years under high UV flux. Monitoring very powerful UV radiation emitted by UV curing lamps or LED arrays require UV photodiodes that endure extreme UV radiation. Monitoring the sun's UV, in particular the erythemal intensity of the sunlight requires photodiodes with a near-perfect visible blindness and carefully tailored spectral response in the UV region. Customers that apply Silicon Carbide UV photodiodes do the best selection within all fields of applicaton. They profit from very low dark current, near perfect visible blindness and "bullet proof" radiation hardness.

Our own SiC wafer production since 2009

Since 2009 sglux produces SiC photodiodes, SiC spectrometer arrays and SiC 4-quadrant chips. The sglux R&D team has almost 20 years of experience in producing UV sensitive semiconductor chips. This skill powered the SiC R&D work focusing on extreme radiation hardness. The German PTB in 2011 measured that the radiation hardness of the sglux SiC UV chips has improved by factor of two compared to UV sensing chips produced by Cree, Inc. until 2007. Furthermore the visible blindness of the sglux chips could be improved by five orders of magnitude compared with Cree SiC chips now totaling to more than ten orders of magnitude of visible blindness. Please also refer to our list of publications (p. 10) of this catalog.

SELECTION GUIDE

Nomenclature

TOCON	ABC, A, B, C, E, blue or GaP	1 ... 10
	Spectral response	**Irradiance limits (V_{supply}=5V, $\lambda = \lambda_{peak}$)**
	ABC = broadband λ_{max} = 290 nm $\lambda_{s10\%}$ = 227 nm ... 360 nm	1 = 1.8 pW/cm² ... 1.8 nW/ cm²
		2 = 18 pW/cm² ... 180 nW/ cm²
	A = UVA λ_{max} = 331 nm $\lambda_{s10\%}$ = 309 nm ... 367 nm	3 = 180 pW/cm² ... 1.8 µW/ cm²
	B = UVB λ_{max} = 280 nm $\lambda_{s10\%}$ = 243 nm ... 303 nm	4 = 1.8 nW/cm² ... 18 µW/ cm²
		5 = 18 nW/cm² ... 180 µW/ cm²
	C = UVC λ_{max} = 275 nm $\lambda_{s10\%}$ = 225 nm ... 287 nm	6 = 180 nW/cm² ... 1.8 mW/ cm²
	Blue λ_{max} = 445 nm $\lambda_{s10\%}$ = 390 nm ... 515 nm	7 = 1.8 µW/cm² ... 18 mW/ cm²
		8 = 18 µW/cm² ... 180 mW/ cm²
	Gap λ_{max} = 445 nm $\lambda_{s10\%}$ = 190 nm ... 570 nm	9 = 180 µW/cm² ... 1.8 W/ cm²
		10 = 1.8 mW/cm² ... 18 W/ cm²
	E = UV-Index spectral response according to CIE087	2 = 0 UVI ... 30 UVI

Some examples for different applications:

TOCON_ABC1	for flame detection
TOCON_C7	for water purification control
TOCON_E2	for UV-Index measurements

Selection of spectral response

The TOCONs are available with six different spectral responses, Broadband UV **"ABC"**, UVA **"A"** , UVB **"B"**, UVC **"C"** and Erythema Curve **"E"** (also useful for other selective UVB/UVC measurements) and blue light **"BLUE"** and **"GaP"** for near UV (UVA+blue+VIS). The below table shows the spectral response of the different TOCONs. For detailed specification please refer to our model overview (page 6) and the datasheet.

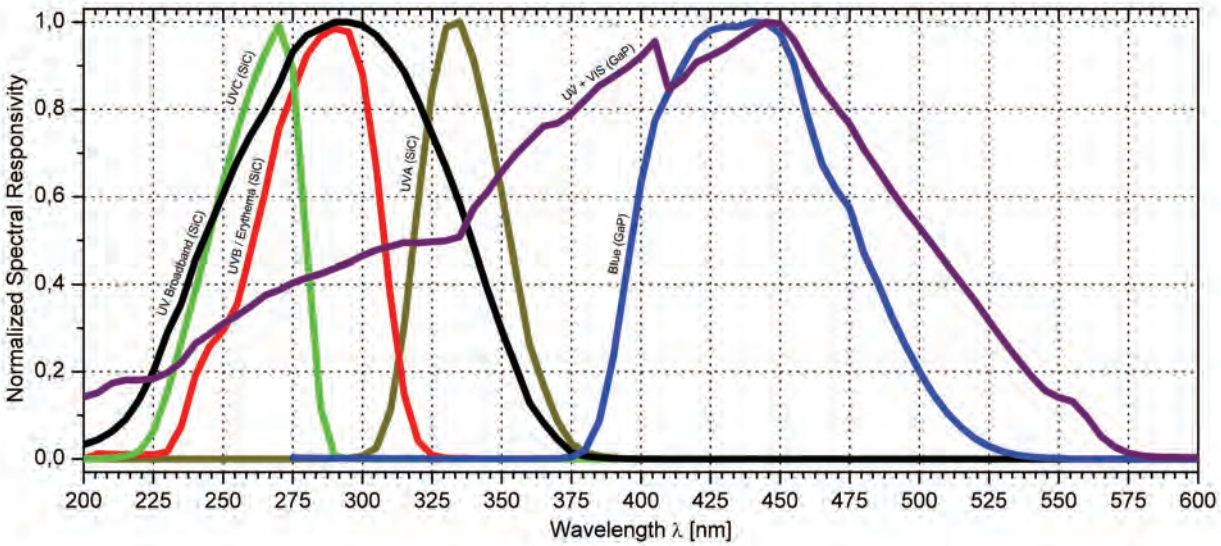

Selection of sensitivity range

The selection of the sensitivity range must be thorough. If the TOCON is too sensitive it will saturate below the upper limit of the radiation range to be measured. Conversely, a TOCON that is too insensitive gives no or a too low voltage output. Thus, for dynamic range selection, please estimate, it is best to calculate what is the max. radiation your TOCON must measure without getting saturated (the sensor will not be damaged if saturated). If not possible, we recommend to procure two samples with different sensitivities and have an experiment. The related min. radiation is lower by approx. factor 5000 – if the TOCON is powered with 5V. It is possible to power the TOCON with lower voltages down to 2.5V. However, this will reduce the dynamic range by factor $5V/V_{supply}$. The graph below shows the sglux TOCONs offered spread out over a radiant intensity range of 13 orders of magnitude. The dynamic range is determined by the numeric suffix from "1" = very sensitive for very low UV radiation (e.g. a flame) to "10" = very unsensitive for very strong radiation (e.g curing source). For detailed specification please refer to our model overview (page 6) and the datasheet.

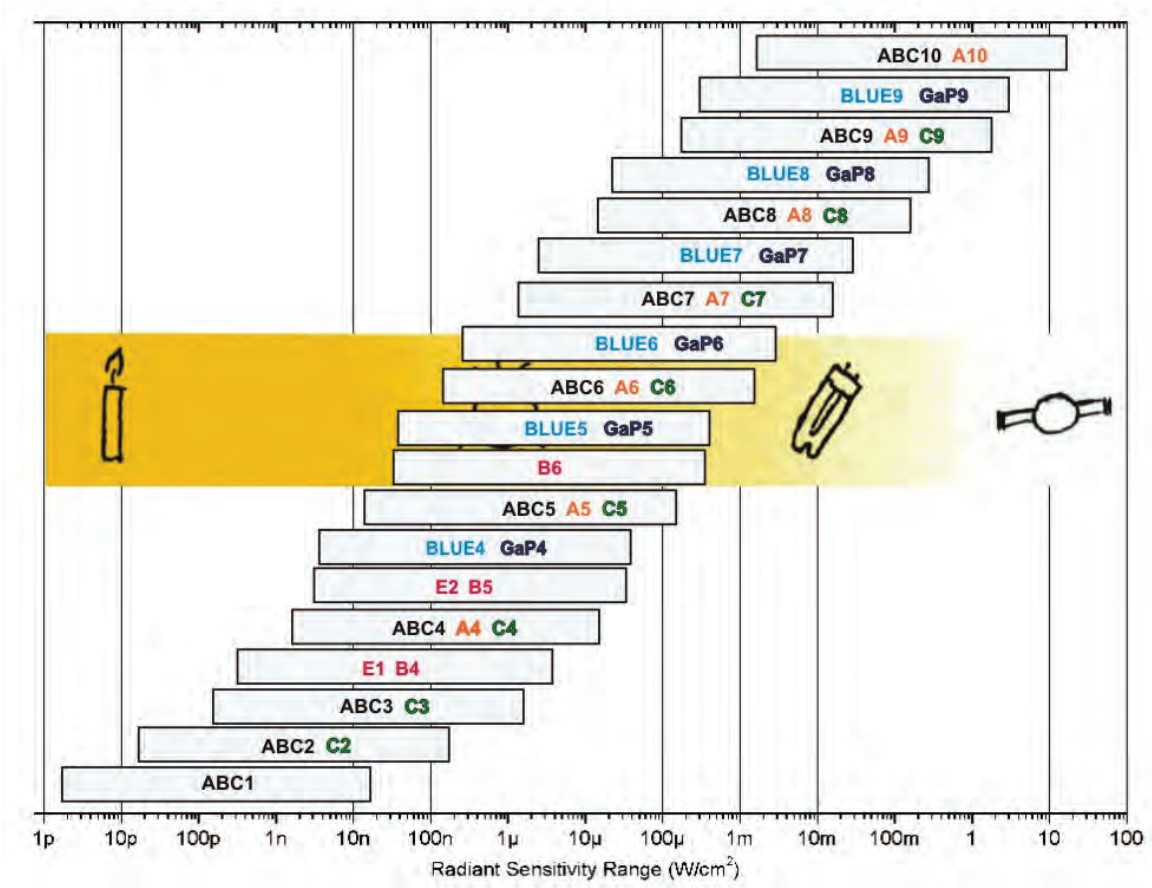

TOCON

Catalog

sglux
The UV Experts

HOW TO USE A TOCON?

The 0 to 5V output voltage can be directly connected to a voltmeter or a controller. The TOCON is to be supplied with a voltage of V_{supply} = 2.5 - 5 V_{DC} between pin V_s and pin *GND*. The voltage output signal is measured between pin *OUT* und pin *GND*.

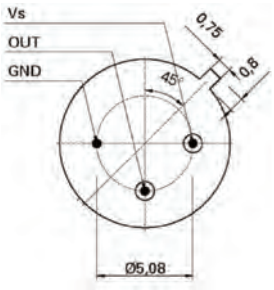

PRODUCT DETAILS OF ALL TOCONs

General specifications

	SYMBOL	VALUE	UNIT
Maximum Ratings			
Operating Temperature Range	T_{opt}	-25 ... +85	°C
Storage Temperature Range	T_{stor}	-40 ... +100	°C
Solding Temperature (3s)	T_{sold}	300	°C
General Characteristics			
Supply voltage	V_{supply}	-2.5 ... +5.0	V
Saturation voltage	V_{sat}	V_{supply} -5%	V
Dark offset voltage	V_{offset}	50	µV
Temperature coefficient	Tc	<-0.3	%/K
Current consumption	I	150	µA
Bandwith (-3 dB)	Q	15	Hz
Risetime (10–90%)	t_{rise}	0.058 – 0.182	s
(other risetimes on request)			
Spectral Characteristics (T = 25°C, V_{supply} = +5V)			
Typical respons. at peak wavelength	S_{max}	see next pages	nm
Wavelength of max. spectral responsivity	I_{max}	see next pages	nm
Responsivity range (S = 0.1 * S_{max})	–	see next pages	nm
SiC Visible blindness (S_{max} / $S_{>405nm}$)	VB	> 10^{10} (SiC)	–

TOCON model overview

Model	Approx. min. irradiance (mW/cm²)	Approx. max. irradiance (V_{supply} = 5V) (mW/cm²)	Applications
Broadband UV (SiC) Peak wavelength = 290 nm / sensivity range (S = 0.1*S_{max}) = 227 nm–360 nm			
TOCON ABC 1	1.80 E–09	1.80 E–05	Very low UV radiation detection, flame detection
TOCON ABC 2	1.80 E–08	1.80 E–04	Low UV radiation detection, occupational safety
TOCON ABC 3	1.80 E–07	1.80 E–03	UV radiation detection, occupational safety
TOCON ABC 4	1.80 E–06	1.80 E–02	UV irradiation measurement
TOCON ABC 5	1.80 E–05	1.80 E–01	UV irradiation measurement
TOCON ABC 6	1.80 E–04	1.80 E+00	Optimized for total sun UV measurements (not Erythema curve)
TOCON ABC 7	1.80 E–03	1.80 E+01	UV irradiation measurement, industrial standard UV radiation
TOCON ABC 8	1.80 E–02	1.80 E+02	Curing lamp control
TOCON ABC 9	1.80 E–01	1.80 E+03	Curing lamp control
TOCON ABC 10	1.80 E+00	1.80 E+04	UV hardening control and other very high radiation sources
UVA selective (SiC) Peak wavelength = 331 nm / sensivity range (S = 0.1*S_{max}) = 309 nm–367 nm			
TOCON A 4	1.80 E–06	1.80 E–02	UVA radiation detection
TOCON A 5	1.80 E–05	1.80 E–01	UVA irradiation measurement
TOCON A 6	1.80 E–04	1.80 E+00	UVA irradiation measurement
TOCON A 7	1.80 E–03	1.80 E+01	UVA irradiation measurement
TOCON A 8	1.80 E–02	1.80 E+02	Measurement of high UVA irradiation, curing lamp control
TOCON A 9	1.80 E–01	1.80 E+03	Measurement of very high UVA irradiation, curing lamp control
UVB + UVC selective (SiC) Peak wavelength = 280 nm / sensivity range (S = 0.1*S_{max}) = 243 nm–303 nm for UVB + UVC measurements and for Erythema Curve, complies with CIE087 and DIN5050			
TOCON B 4	7.50 E–07	7.50 E–03	UVB irradiation measurement
TOCON B 5	7.50 E–06	7.50 E–02	UVB irradiation measurement
TOCON B 6	7.50 E–05	7.50 E–01	UVB irradiation measurement
1 UVI input produces electrical output			
TOCON E 1	0.01 UVI	3 UVI	UV-Index measurements, if an attenuating diffusor is used
TOCON E 2	0.1 UVI	30 UVI	UV-Index measurements

TOCON

Catalog

sglux
The UV Experts

TOCON model overview

Model	Approx. min. irradiance (mW/cm²)	Approx. max. irradiance (V_{supply} = 5V) (mW/cm²)	Applications
UVC selective (SiC) Peak wavelength = 275 nm / sensivity range (S = 0.1*S_{max}) = 225 nm–287 nm; complies with DVGW W294(3) and ÖNorm			
TOCON C 2	1.80 E–08	1.80 E–04	Low UVC radiation detection, occupational safety
TOCON C 3	1.80 E–07	1.80 E–03	UVC radiation detection, occupational safety
TOCON C 4	1.80 E–06	1.80 E–02	UVC irradiation measurement
TOCON C 5	1.80 E–05	1.80 E–01	Purification lamp control
TOCON C 6	1.80 E–04	1.80 E+00	Purification lamp control
TOCON C 7	1.80 E–03	1.80 E+01	Purification lamp control
TOCON C 8	1.80 E–02	1.80 E+02	Curing lamp control
TOCON C 9	1.80 E–01	1.80 E+03	Curing lamp control
Blue Light (GaP) Peak wavelength = 445 nm / sensivity range (S = 0.1*S_{max}) = 390 nm–515 nm; complies with 2006/25/EG			
TOCON BLUE 4	4.20 E–06	4.30 E–02	Measurement of very low blue light irradiation, occupational safety
TOCON BLUE 5	4.20 E–05	4.30 E–01	Measurement of low blue light irradiation, occupational safety
TOCON BLUE 6	4.20 E–04	4.30 E+00	Measurement of blue light irradiation, occupational safety
TOCON BLUE 7	4.20 E–03	4.30 E+01	Measurement of blue light irradiation, occupational safety
TOCON BLUE 8	4.20 E–02	4.30 E+02	Measurement of high blue light irradiation, occupational safety
TOCON BLUE 9	4.20 E–01	4.30 E+03	Measurement of very high blue light irradiation, occupational safety
UV + VIS (GaP) Peak wavelength = 445 nm / sensivity range (S = 0.1*S_{max}) = 190 nm–570 nm			
TOCON GaP 4	4.20 E–06	4.30 E–02	Measurement of very low UV & VIS light irradiation, occupational safety
TOCON GaP 5	4.20 E–05	4.30 E–01	Measurement of low UV & VIS light irradiation, occupational safety
TOCON GaP 6	4.20 E–04	4.30 E+00	Measurement of blue UV & VIS light irradiation, occupational safety
TOCON GaP 7	4.20 E–03	4.30 E+01	Measurement of blue UV & VIS light irradiation, occupational safety
TOCON GaP 8	4.20 E–02	4.30 E+02	Measurement of high UV & VIS light irradiation, occupational safety
TOCON GaP 9	4.20 E–01	4.30 E+03	Measurement of very high UV & VIS light irradiation, occupational safety

Accessories

TOCON housing	miniature stainless steel housing (M12x1) with TOCON installed and removable 5-pin connector with 2m cable, easy to mount and connect, robust thread body, suitable for all TOCONs
TOCON PTFE housing	miniature PTFE housing (M12x1) with TOCON installed and removable 5-pin connector with 2m cable, easy to mount and connect, dirt repellent
TOCON Water housing	miniature water pressure proof (10 bar) housing with G1/4“ thread with TOCON installed and removable 5-pin connector with 2m cable, easy to mount and connect, dirt repellent
TOCON Starter Kit	Kit for initial testing setup, includes a TOCON socket, two banana plugs to connect with a voltmeter and a 9V block battery

Drawings

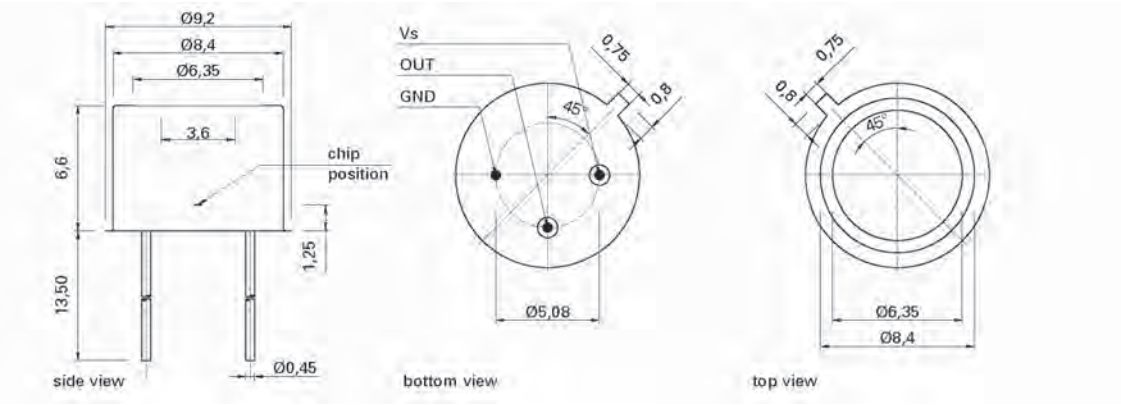

TOCON in TO5 housing with filter, diffusor and / or attenuator

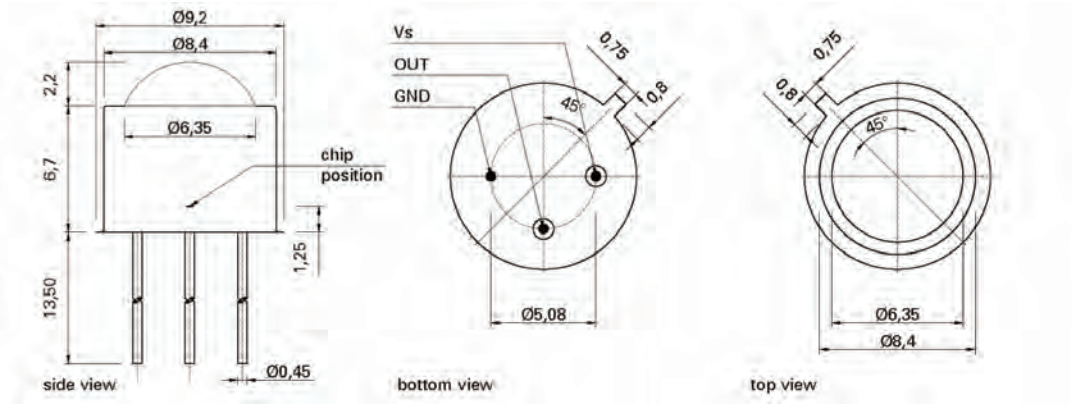

TOCON in TO5 housing with lens cap

Application note for TOCONs

The TOCONs need a supply voltage of $V_{supply} = 2.5$ to 5VDC and can be directly connected to a controller or voltmeter. Please note that the theoretic maximum signal output is always a little less (approx. 5%) than the supply voltage. To learn more about perfect use of the TOCONs please refer to the TOCON FAQ list published at www.sglux.com. CAUTION! Wrong wiring leads to destruction of the device. For easy setup of the device please ask for a TOCON starter kit that contains a ready to use wired socket, a connector to a 9V battery, 2 banana plugs for V_{out}.

Accessories

TOCON steel housing 24 V

- Small housing for the TOCON series
- Supply voltage 5 to 24 V
- Robust stainless steel M12x1 thread body
- Integrated sensor connector (Binder 4-Pin plug) with 2m connector cable
- Easy to mount and connect

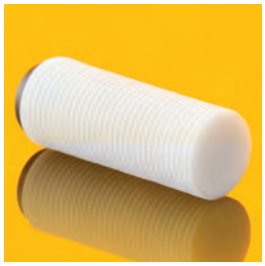

TOCON PTFE housing 24 V

- Small housing for the TOCON series
- Supply voltage 5 to 24 V
- Material teflon (PTFE) M12x1 thread body, dirt-repellent, water proof at wetside (IP68), wide cosine field of view
- Integrated sensor connector (Binder 4-Pin plug) with 2m connector cable
- Easy to mount and connect, cleanable

TOCON water 24 V

- Miniature housing for the TOCON series
- Supply voltage 5 to 24 V
- G1/4" thread, material Teflon (PTFE)
- 10 bar water pressure proof
- Integrated sensor connector (Binder 4-Pin plug) with 2m connector cable
- Easy to mount and connect

Plastic probes for TOCON series

- UV probes in small plastic housings with a TOCON inside
- Customized housings available
- Easy to mount and to connect
- Integrated sensor connector (Binder 4-Pin plug)
- Connector cable available

TOCON Starter kit

- Optional feature for all TOCON detectors
- kit for easy initial testing setup
- output voltage 0 to 5 V
- 9 V block battey included, easy connection via banana plug ground

LIST OF PUBLICATIONS

P. Sperfeld[1], B. Barton[1], S. Pape[1], A. Towara[1], J. Eggers[2], G. Hopfenmueller[3]
[1]Physikalisch-Technische Bundesanstalt Braunschweig und Berlin (PTB), Germany, [2]DVGW-Technologiezentrum Wasser, Karlsruhe, Germany, [3]sglux GmbH, Berlin, Germany
„Spectral irradiance measurement and actinic radiometer calibration for UV water disinfection“
Metrologia, Issue 51 (2014), *p. 282-288*.

P. Sperfeld[1], B. Barton[1], S. Pape[1], A. Towara[1], J. Eggers[2], G. Hopfenmueller[3]
[1]Physikalisch-Technische Bundesanstalt Braunschweig and Berlin (PTB), Germany, [2]DVGW-Technologiezentrum Wasser, Karlsruhe, Germany, [3]sglux GmbH, Berlin, Germany
*„Spectral Irradiance Measurement and Actinic Radiometer Calibration for UV Water Disinfection*Proceedings of NEWRAD 2014, edited by S. Park, P. Kaerhae and E. Ikonen. (Aalto University, Espoo, Finland 2014) *p. 128.*

B. Barton[1], P. Sperfeld[1], A. Towara[1], G. Hopfenmueller[2]
[1]Physikalisch-Technische Bundesanstalt Braunschweig und Berlin (PTB), 4.1 Photometry and Applied Radiometry, Braunschweig, Germany, [2]sglux GmbH, Berlin, Germany
*„Developing and setting up a calibration facility for UV sensors at high irradiance rates*EMEA Regional Conference, Karlsruhe, Germany (2013)

P. Sperfeld[1], B. Barton[1], S. Pape[1], G. Hopfenmueller[2]
[1]Physikalisch-Technische Bundesanstalt Braunschweig und Berlin (PTB), 4.1 Photometry and Applied Radiometry, Braunschweig, Germany, [2]sglux GmbH, Berlin, Germany
*„Traceable spectral irradiance measurements at UV water disinfection facilities*EMEA Regional Conference, Karlsruhe, Germany (2013)

G. Hopfenmueller[1], T.Weiss[1], B. Barton[2], P. Sperfeld[2], S. Nowy[2], S. Pape[2], D. Friedrich[2], S. Winter[2], A. Towara[2], A. Hoepe[2], S. Teichert[2]
[1]sglux GmbH, Berlin, Germany, [2]Physikalisch-Technische Bundesanstalt Braunschweig und Berlin (PTB), 4.1 Photometry and Applied Radiometry, Braunschweig, Germany
*„PTB traceable calibrated reference UV radiometer for measurements at high irradiance medium pressure mercury discharge lamps*EMEA Regional Conference, Karlsruhe, Germany (2013)

D. Prasai[1], W. John[1], L. Weixelbaum[1], O. Krueger[1] G. Wagner[2], P. Sperfeld[3], S. Nowy[3], D. Friedrich[3], S. Winter[3] and T. Weiss[4]
[1]Ferdinand-Braun-Institut, Leibniz-Institut fuer Hoechstfrequenztechnik, Berlin, Germany, [2]Leibniz-Institut fuer Kristallzuechtung, Berlin, Germany, [3]Physikalisch-Technische Bundesanstalt Braunschweig und Berlin (PTB), 4.1 Photometry and Applied Radiometry, Braunschweig, Germany, [4]sglux GmbH, Berlin, Germany
„Highly reliable silicon carbide photodiodes for visible-blind ultraviolet detector applications J. Mater. Res., first view (2012)
Copyright © Materials Research Society 2012. Personal use of this material is permitted. However, permission to reprint/republish this material for advertising or promotional purposes or for creating new collective works for resale or redistribution to servers or lists, or to reuse any copyrighted component of this work in other works must be obtained from the Cambridge University Press.

S. Nowy[1], B. Barton[1], S. Pape[1], P. Sperfeld[1], D. Friedrich[1], S. Winter[1], G. Hopfenmueller[2], and T. Weiss[2]
[1]Physikalisch-Technische Bundesanstalt Braunschweig und Berlin (PTB), 4.1 Photometry and Applied Radiometry, Braunschweig, Germany, [2]sglux GmbH, Berlin, Germany
*„Characterization of SiC photodiodes for high irradiance UV radiometers*Proceedings of NEWRAD2011, edited by S. Park and E. Ikonen. (Aalto University, Espoo, Finland, 2011) *p. 203.*

B. Barton[1], P. Sperfeld[1], S. Nowy[1], A. Towara[1], A. Hoepe[1], S. Teichert[1], G. Hopfenmueller[2], M. Baer[3], and T. Kreuzberger[3]
[1]Physikalisch-Technische Bundesanstalt Braunschweig und Berlin (PTB), 4.1 Photometry and Applied Radiometry, Braunschweig, Germany, [2]sglux GmbH, Berlin, Germany, [3]SGIL Silicaglas GmbH, Langewiesen, Germany
*„Characterization of new optical diffusers used in high irradiance UV radiometers*Proceedings of NEWRAD2011, edited by S. Park and E. Ikonen. (Aalto University, Espoo, Finland, 2011) p. 278.1.





UV TOUCH

SiC Ultraviolet (UV) Probes

- **Various optics and housings tailored for individual conditions of use**
- **0 to 5 V voltage, 4 to 20 mA current loop or digital interface (CAN or USB) output options**
- **SiC photodiode chip based Broadband UV sensitivity or filtered for UVA, UVB, UVC or UV-Index spectral sensitivity**

sglux
The UV Experts

BostonElectronics

91 Boylston Street, Brookline, MA 02445
tel: (617)566-3821 fax: (617)731-0935
www.boselec.com boselec@boselec.com

SiC UV Sensor Probes

Catalog

sglux
The UV Experts

UV SENSOR PROBES

Content

- General information about the sglux UV probes **p. 1**
- Overview of the fixed and variable properties **p. 2**
- Available probe housings and accessories **p. 3**
- Selection guide **p. 4**
- Sensor requirements questionaire sheet **p. 10**
- List of publications **p. 11**

GENERAL INFORMATION

about the sglux UV sensor probes

All sglux UV sensor probes contain a UV photodiode and an electronic circuitry to generate the desired signal output. That can be a voltage, a current or a digital information stream. The applications of UV sensor probes are quite varied and include use and survival at high temperatures, in rain, under water as well as in normal environments. Therefore the required optics, environmental endurance, spectral responsivity and electronic output interface must be tailored for individual conditions of use.

About the material SiC

Most of the UV probes base on Silicon Carbide (SiC) detector chips. A GaP-chip based series is available for blue light hazard measurement. Applications that require UV photodiodes differ widely in required detector properties as well as in spectral and absolute sensitivity. In the field of flame detection a very low radiation intensity must be reliably detected. The monitoring of UV purification lamps needs UV photodiodes that will operate in high UV brightness without degradation for many years. Monitoring of very powerful UV radiation emitted by UV curing lamps or LED arrays requires UV photodiodes that endure extreme UV radiation intensity. Monitoring the sun's UV, in particular the erythemal part of the sunlight requires photodiodes with perfect visible blindness and carefully tailored spectral response in the UV region. Customers that apply Silicon Carbide UV photodiodes to these applications make the best choice within all these application variables. They profit from the very low dark current, near perfect visible blindness, bullet proof radiation hardness (resistance to aging under high UV dose) and low temperature coefficient of the signal, ~ 0,1%/K.

Our own SiC wafer production since 2009

Since 2009 sglux has produced its own SiC photodiodes, multielement linear SiC spectrometer arrays and SiC-quadrant chips. The sglux R&D team has almost 20 years of experience in producing UV sensitive semiconductor chips. This skill powered the SiC R&D work focusing on extreme radiation hardness. The German PTB in 2011 measured that the radiation hardness of the sglux SiC UV chips has improved by factor of two compared to 1st generation SiC, sensing chips produced by Cree, Inc. until 2007. Furthermore the visible blindness of the sglux chips was improved by five orders of magnitude compared with Cree SiC chips and now totals more than ten orders of magnitude of visible blindness. Please also refer to our list of publications (p. 11) of this catalog.

SiC UV Sensor Probes

Catalog

sglux
The UV Experts

OVERVIEW OF THE FIXED AND VARIABLE PROPERTIES

Fixed Specifications **Parameter**	**Value**
Dimensions	please refer to drawing of the housings (next pages)
Temperature Coefficient (30 to 65°C)	0.05 to 0.075%/K
Operating Temperature	-20 to +80°C (+170°C)
Storage Temperature	-40 to +80°C (+170°C)
Humidity	< 80%, non condensing, submersible on request

Configurable Specifications **Parameter**	**Value**
Spectral Sensitivity	Broadband UV, UVA, UVB, UVC, UV-Index, Bluelight and UV+VIS
Signal Output	0 to 5 V or 4 to 20 mA or CAN bus signal (125kbit/s) or USB
Current Consumption	for 0 to 5 V = < 30 mA / for 4 to 20 mA = signal out / digital = < 17 mA
Connections	cable = 2 m cable with tinned leads on free end plug = 5 pin male connector with 2 m cable with tinned leads on free end CAN = 2 m cable with 8 pin male connector (to converter or else) USB = with 1.5 m cable with USB-A plug
Measuring Range	between 1 nW/cm² to 1 µW/cm² and 20 mW/cm² to 20 W/cm² for analog or 100 µW/cm² to 20 W/cm² for digital sensors (see p. 10)

The measuring range of **analog sglux UV sensors** is 3 orders of magnitude corresponding to 5 mV to 5 V or 4.02 mA to 20 mA output. The highest sensitivity range is 1 nW/cm² to 1 µW/cm². The lowest sensitivity range is 20 mW/cm² to 20 W/cm². The **digital sglux UV sensors** contain an integrated microprocessor that converts the UV radiation into 125kbit/s digital CAN bus data. A large dynamic range of 5 orders of magnitude allows to measure low radiation and strong radiation without changing the probe. Customers may specify any range between the mentioned limits.

SiC UV Sensor Probes

Catalog

sglux
The UV Experts

AVAILABLE PROBE HOUSINGS

UV-Surface ⇢ Top looking surface-mount UV sensor

For UV radiation reference measurements of radiation exposed to a surface (diameter 38 mm).

UV-Air ⇢ Threaded body UV sensor

With M22x1.5 thread for many mounting possibilities i.e. inside UV radiation chambers.

UV-Cosine ⇢ Waterproof cosine corrected UV sensor for outdoor use

Stain repellent for outdoor or in-water measurements. Particularly suited for UV-Index measurements. (M20x1.5)

UV-Water-G3/4 ⇢ 10 bar water pressure proof UV sensor with G3/4“ thread

Used in pressurized water systems. Suited for low and medium pressure lamps.

UV-Water-PTFE ⇢ 10 bar water pressure proof UV sensor with G1/4“ thread

Used in pressurized water systems. Suited for low pressure lamps.

UV-DVGW ⇢ UV sensor for DVGW (40°) certified water purifiers

Complies with standard DVGW294-3(2006), suited for certified water purifiers.

UV-DVGW-160 ⇢ UV sensor for DVGW (160°) and ÖNORM certified water purifiers

Complies with standard DVGW294-3(2006) and ÖNORM 5873-2, suited for certified water purifiers with 160° FOV.

UV-Cure ⇢ Sensor for strong UV irradiation, working temperature up to 170° (338°F)

To control curing processes or other high temperature operations where strong UV light is present. (M22x1.5)

TOCON-Probe ⇢ Miniature UV sensor

Miniature UV sensor in M12x1 housing. Available with 0 to 5 V voltage output.

ACCESSORIES FOR ANALOG SENSOR PROBES

Sensor Monitor 5.0
measuring and control module

RADIKON ⇢
converter box and measurement controller

ACCESSORIES FOR DIGITAL SENSOR PROBES

UVTOUCH ⇢
digital multi-channel UV radiometer

DIGIBOX ⇢
CAN-to-USB converter

Control Pad ⇢
windows 8 based 10.1" tablet computer display unit

WINDOWS

WIN294 ⇢
measurement window acc. to DVGW 294-3 and ÖNORM M5873

SiC UV Sensor Probes

Catalog

sglux
The UV Experts

SELECTION GUIDE

UV sensor “UV-SURFACE”

This UV sensor sensor is used for UV radiation reference measurements on surfaces exposed to UV light. It is available with a NIST or PTB traceable calibration. Cosine correction is available on request.

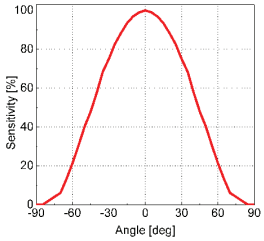

ANALOG CABLE

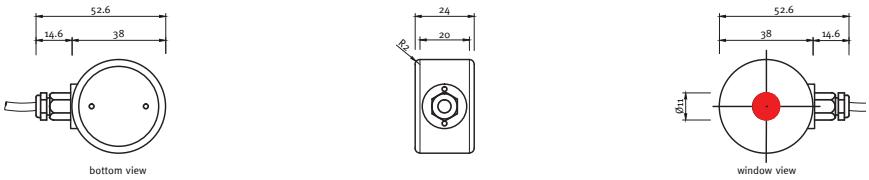

DIGITAL

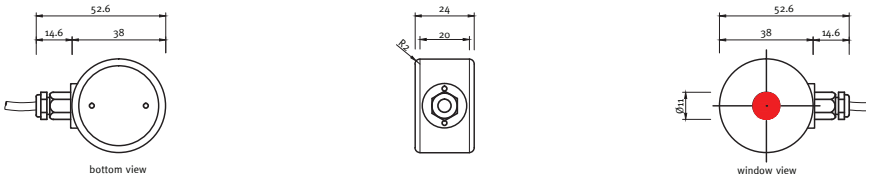

UV sensor “UV-AIR”

This UV sensor is a sensor with a male threaded body (M22x1.5). It is available with a NIST or PTB traceable calibration.

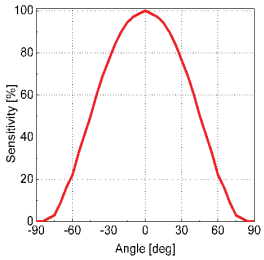

ANALOG CABLE

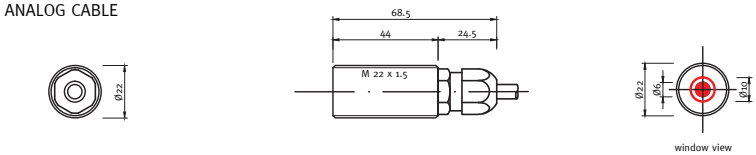

ANALOG PLUG

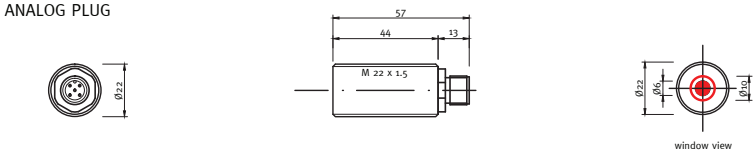

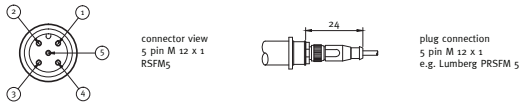

DIGITAL

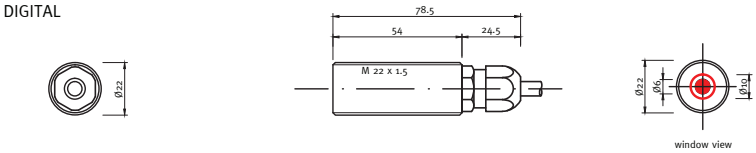

SiC UV Sensor Probes

Catalog

sglux
The UV Experts

UV sensor “UV-COSINE”

This UV sensor is a cosine corrected waterproof sensor with a male threaded body (M20x1.5). The PTFE housing is stain repellent. This UV sensor is suited for outdoor or in-water UV measurements. It is particularly suited for UV-Index measurements. The UV sensor is available with a NIST or PTB traceable calibration.

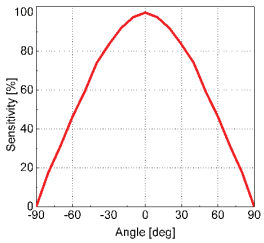

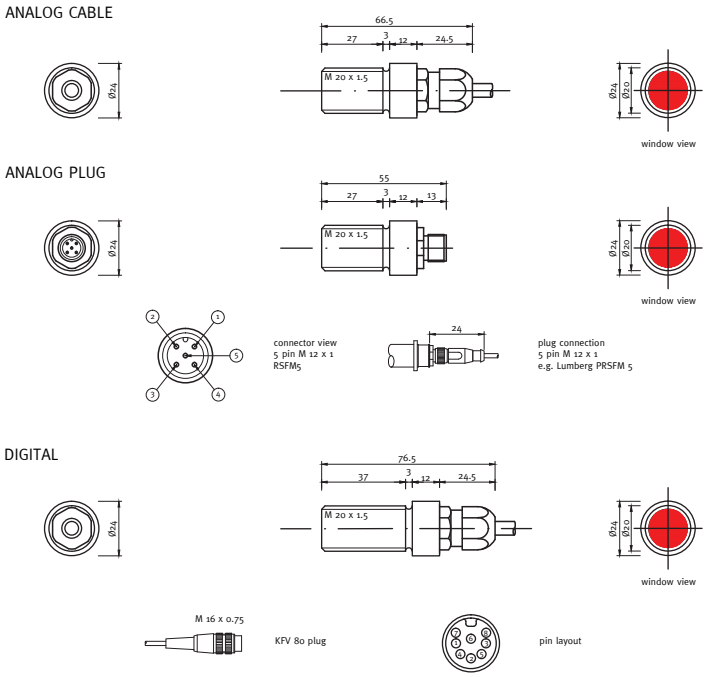

UV sensor “UV-WATER-G3/4”

This UV sensor is a waterproof (10 bar or 145 psi) sensor with a male threaded body (G3/4") to be used in pressurized water systems. It is suited for low and medium pressure lamps. The UV sensor is available with a NIST or PTB traceable calibration.

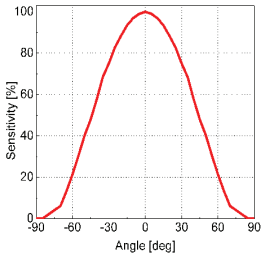

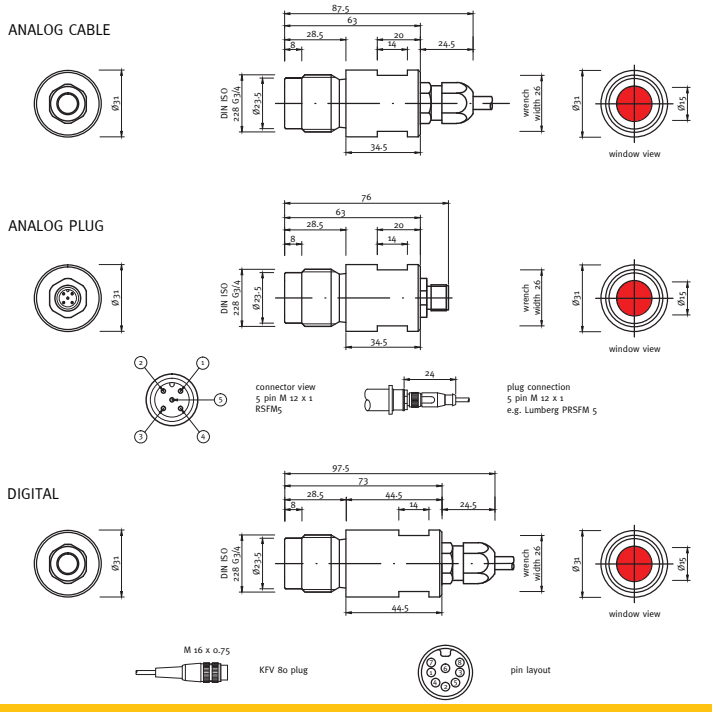

SiC UV Sensor Probes

Catalog

sglux
The UV Experts

UV sensor “UV-WATER-PTFE”

This UV sensor is a waterproof (10 bar or 145 psi) sensor with a G1/4" thread to be used in pressurized water systems. The sensor housing is made of Teflon (PTFE). The sensor is suited for low pressure lamps. The UV sensor is available with a NIST or PTB traceable calibration.

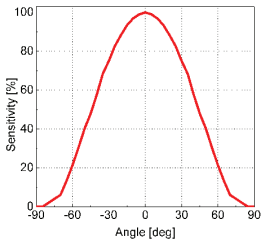

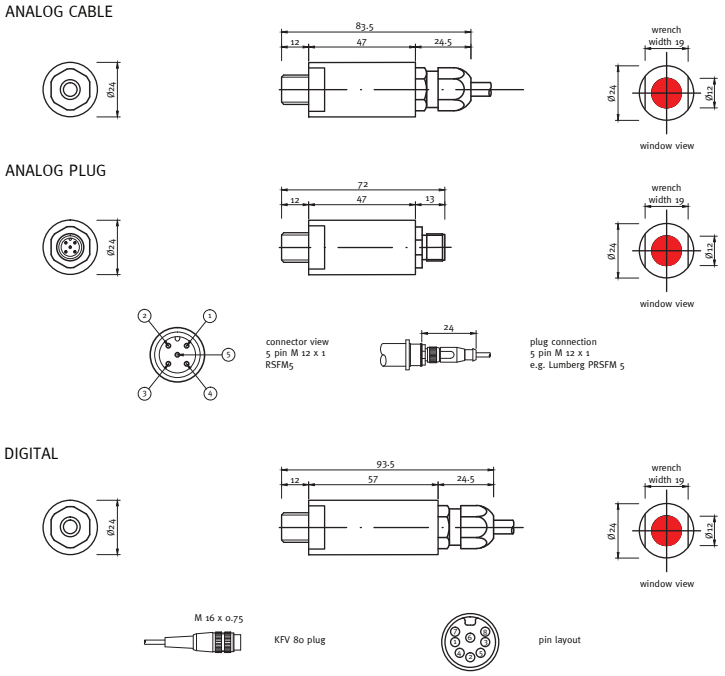

UV sensor “UV-DVGW”

This UV sensor is a special sensor for DVGW certified water purifiers with 40° field of view. It complies with the standard DVGW W294-3(2006). It is always delivered calibrated according to DVGW requirements. A water-proof measurement window ("WIN294") is available.

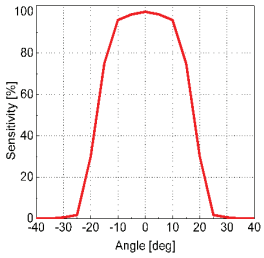

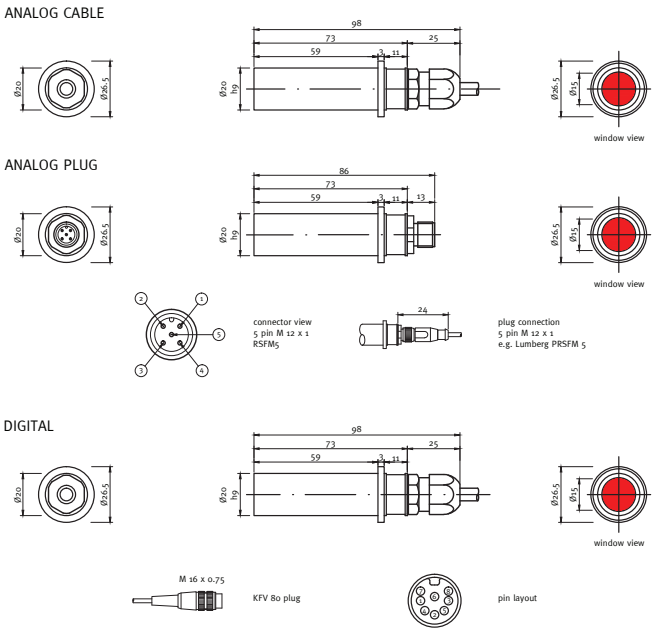

SiC UV Sensor Probes

Catalog

sglux
The UV Experts

UV sensor “UV-DVGW-160”

This UV sensor is a special sensor for DVGW and ÖNORM certified water purifiers with 160° field of view. Suitable for low pressure and medium pressure lamps. It complies with the standard DVGW W294-3(2006) and ÖNORM 5873-2. The UV sensor is always delivered calibrated according to DVGW and ÖNORM requirements. A water-proof measurement window ("WIN294") is available.

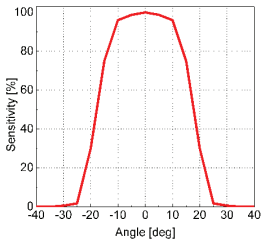

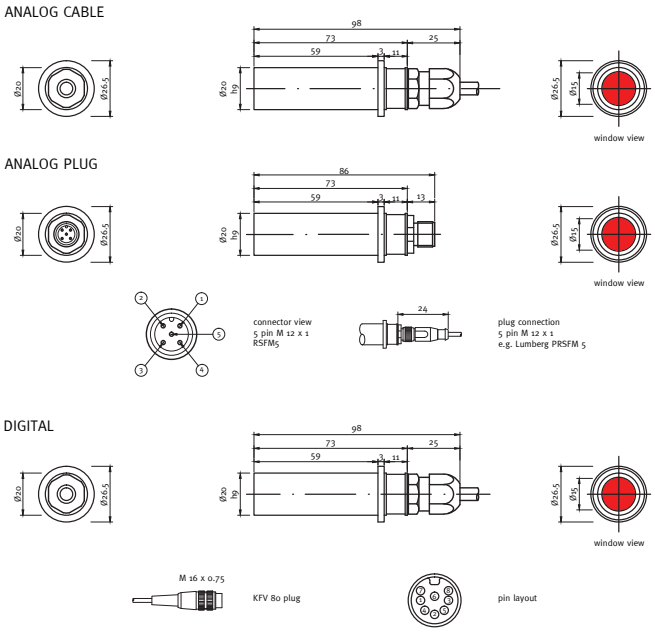

UV sensor “UV-CURE”

This UV sensor is an axial looking sensor with a male threaded body (M22x1.5) for measurement of high UV radiation to control i.e. curing or drying processes where strong UV light is present. It works with a diffuser made of radiation hard and temperature resistant microporous quartz glass. The UV sensor is available with a NIST or PTB traceable calibration.

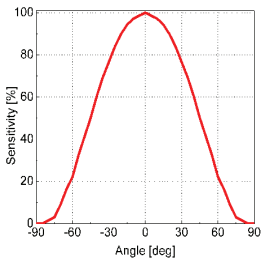

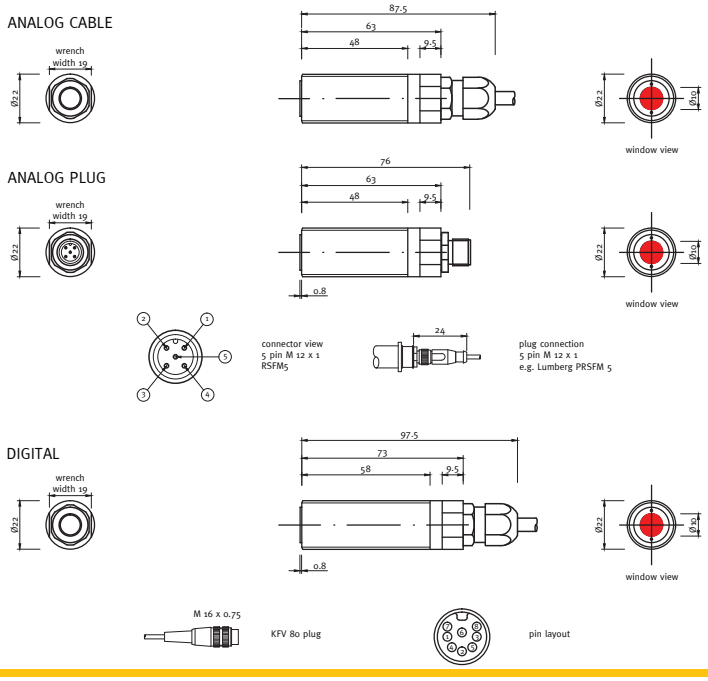

SiC UV Sensor Probes

Catalog

sglux
The UV Experts

UV sensor “UV-CURE-HT”

This UV sensor is an axial looking sensor with a male threaded body (M22x1.5) for measurement of high UV radiation at high temperature (up to 170°C / 338°F) e.g. for curing and drying processes. It works with a diffuser made of radiation hard and temperature resistant microporous quartz glass and is configured with a heat resistant cable. The signal output is photocurrent (nA to µA). The UV-Cure-HT needs an external amplifier (such as the sglux RADIKON).

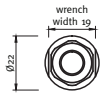

cable gland

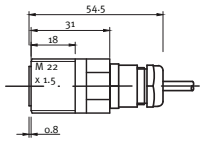

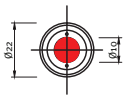

window view

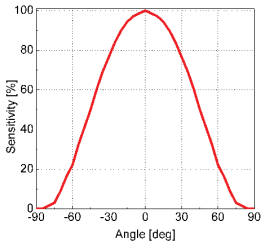

UV sensor “TOCON-Probe”

This UV sensor is a miniature UV sensor with a male threaded body (M12x1) configured with an amplified UV photodetector. The signal output is a voltage of 0 to 5 V. The UV sensor is available with a NIST or PTB traceable calibration.

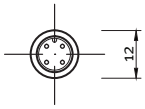

connector view
4 pin M 12 x 1
RSFM5

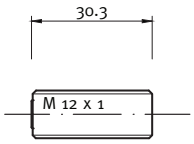

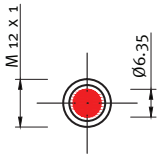

window view

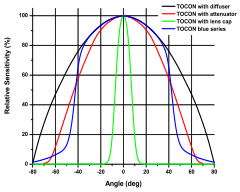

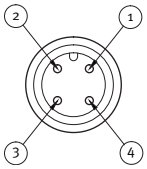

plug connection
4 pin M 12 x 1
e.g. Lumberg PRSFM 5
$V_- = 2$, $V_+ = 4$, $V_{out} = 3$

SiC UV Sensor Probes

Catalog

sglux
The UV Experts

UV sensor “UV-SURFACE-UVI”

This UV sensor is designed for very high accuracy UV-Index measurements. The measurement mean error of this sensor is 1.3% only. The spectral response curve and the field of view (cosine type) are in near perfect accordance with the requirements defined in the ISO 17166 standard. The UV sensor is available with a PTB traceable calibration.

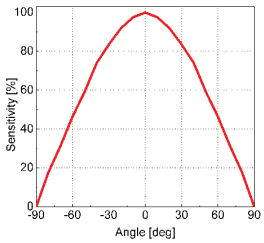

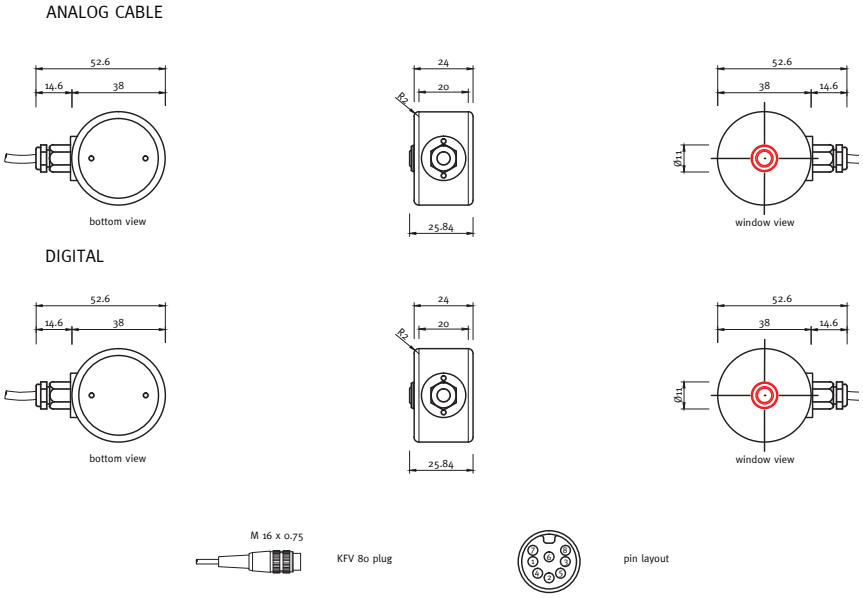

UV sensor “UV-COSINE-UVI”

This UV sensor is designed for very high accuracy UV-Index measurements. The measurement mean error of this sensor is 1.3% only. The spectral response curve and the field of view (cosine type) are in near perfect accordance with the requirements defined in the ISO 17166 standard. The housing is made of PTFE. It is waterproof and stain repellent with a male threaded body (M20x1.5). The UV sensor is available with a PTB traceable calibration.

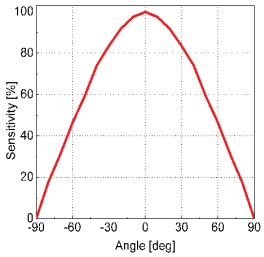

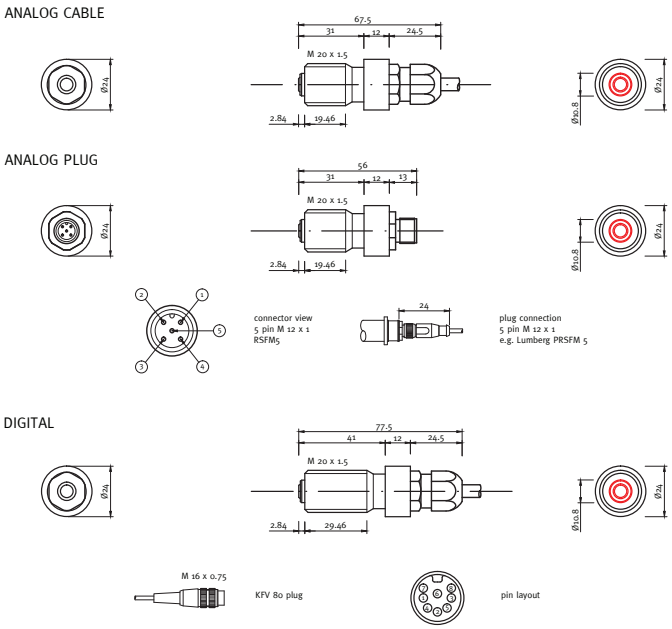

SiC UV Sensor Probes

Catalog

sglux
The UV Experts

Sensor Requirements Questionaire Sheet

STEP 1 ⇢ Configuration of Normalized Spectral Responsivity

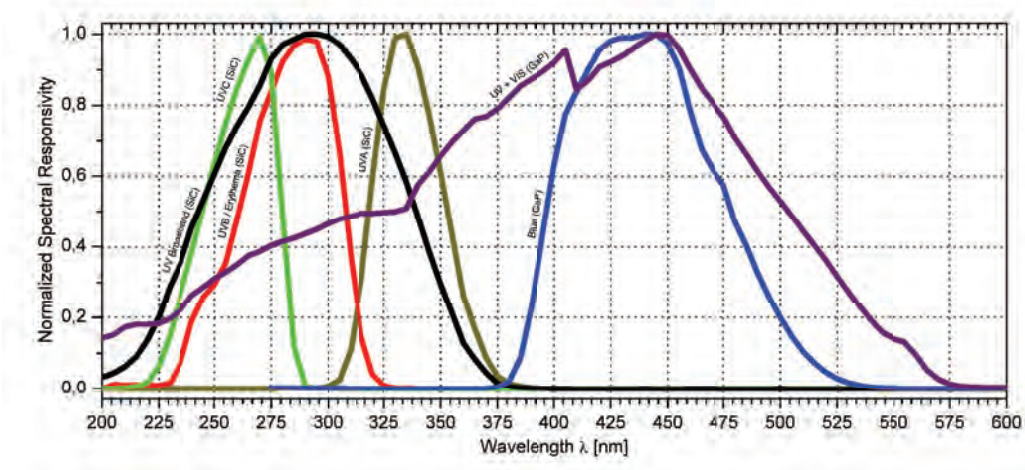

Please select

- ☐ Broadband UV (SiC)
- ☐ UVC (SiC)
- ☐ UVB/Erythema (SiC)
- ☐ UVA (SiC)
- ☐ Blue (GaP)
- ☐ UV + VIS (GaP)

STEP 2 ⇢ Signal Output Type Selection

Please tick your selection. The pin configuration is shown in drawings.

Output Type	Description	Connection = "cable"	Connection = "male plug"
☐ 0 to 5 V	0 to 5 V voltage output proportional to radiation input. Supply voltage is 7 to 24VDC, current consumption is < 30 mA.	☐ V_- = brown, V_+ = white, V_{out} = green, shield = black	☐ V_- = 1, V_+ = 4, V_{out} = 3
☐ 4 to 20 mA	4 to 20 mA current loop for PLC controllers. The current is proportional to the radiation, supply voltage is 24VDC.	☐ V_- = brown, V_+ = white, shield = black	☐ V_- = 1, V_+ = 4
☐ CAN bus signal	VSCP protocol according to the following specifications: http://download.sglux.de/probes-digital/vscp-protocol/	Pins 1 & 7 = CAN low Pins 3 & 8 = CAN high Pins 2 & 4 & 5 = GND	
☐ USB	The signal is transmitted via standard USB-A plug to a computer. Software and 1.5 m cable are included.		

STEP 3 ⇢ Measurement Range Selection

Please mark your approx. max. UV intensity to be measured. The dynamic range for analog UV sensors is 3 orders of magnitude and for digital UV sensors it is 5 orders of magnitude.

max. UV intensity	1µW/cm²	10µW/cm²	100µW/cm²	1 mW/cm²	10mW/cm²	100mW/cm²	1 W/cm²	10 W/cm²	20 W/cm²

SiC UV Sensor Probes

Catalog

sglux
The UV Experts

LIST OF PUBLICATIONS

P. Sperfeld[1], B. Barton[1], S. Pape[1], A. Towara[1], J. Eggers[2], G. Hopfenmueller[3]
[1]Physikalisch-Technische Bundesanstalt Braunschweig und Berlin (PTB), Germany, [2]DVGW-Technologiezentrum Wasser, Karlsruhe, Germany, [3]sglux GmbH, Berlin, Germany
„Spectral irradiance measurement and actinic radiometer calibration for UV water disinfection“ Metrologia, Issue 51 (2014), *p. 282-288*.

P. Sperfeld[1], B. Barton[1], S. Pape[1], A. Towara[1], J. Eggers[2], G. Hopfenmueller[3]
[1]Physikalisch-Technische Bundesanstalt Braunschweig and Berlin (PTB), Germany, [2]DVGW-Technologiezentrum Wasser, Karlsruhe, Germany, [3]sglux GmbH, Berlin, Germany
„Spectral Irradiance Measurement and Actinic Radiometer Calibration for UV Water Disinfection Proceedings of NEWRAD 2014, edited by S. Park, P. Kaerhae and E. Ikonen. (Aalto University, Espoo, Finland 2014) *p. 128.*

B. Barton[1], P. Sperfeld[1], A. Towara[1], G. Hopfenmueller[2]
[1]Physikalisch-Technische Bundesanstalt Braunschweig und Berlin (PTB), 4.1 Photometry and Applied Radiometry, Braunschweig, Germany, [2]sglux GmbH, Berlin, Germany
„Developing and setting up a calibration facility for UV sensors at high irradiance rates EMEA Regional Conference, Karlsruhe, Germany (2013)

P. Sperfeld[1], B. Barton[1], S. Pape[1], G. Hopfenmueller[2]
[1]Physikalisch-Technische Bundesanstalt Braunschweig und Berlin (PTB), 4.1 Photometry and Applied Radiometry, Braunschweig, Germany, [2]sglux GmbH, Berlin, Germany
„Traceable spectral irradiance measurements at UV water disinfection facilities EMEA Regional Conference, Karlsruhe, Germany (2013)

G. Hopfenmueller[1], T.Weiss[1], B. Barton[2], P. Sperfeld[2], S. Nowy[2], S. Pape[2], D. Friedrich[2], S. Winter[2], A. Towara[2], A. Hoepe[2], S. Teichert[2]
[1]sglux GmbH, Berlin, Germany, [2]Physikalisch-Technische Bundesanstalt Braunschweig und Berlin (PTB), 4.1 Photometry and Applied Radiometry, Braunschweig, Germany
„PTB traceable calibrated reference UV radiometer for measurements at high irradiance medium pressure mercury discharge lamps EMEA Regional Conference, Karlsruhe, Germany (2013)

D. Prasai[1], W. John[1], L. Weixelbaum[1], O. Krueger[1] G. Wagner[2], P. Sperfeld[3], S. Nowy[3], D. Friedrich[3], S. Winter[3] and T. Weiss[4]
[1]Ferdinand-Braun-Institut, Leibniz-Institut fuer Hoechstfrequenztechnik, Berlin, Germany, [2]Leibniz-Institut fuer Kristallzuechtung, Berlin, Germany, [3]Physikalisch-Technische Bundesanstalt Braunschweig und Berlin (PTB), 4.1 Photometry and Applied Radiometry, Braunschweig, Germany, [4]sglux GmbH, Berlin, Germany
„Highly reliable silicon carbide photodiodes for visible-blind ultraviolet detector applications J. Mater. Res., first view (2012)
Copyright © Materials Research Society 2012. Personal use of this material is permitted. However, permission to reprint/republish this material for advertising or promotional purposes or for creating new collective works for resale or redistribution to servers or lists, or to reuse any copyrighted component of this work in other works must be obtained from the Cambridge University Press.

S. Nowy[1], B. Barton[1], S. Pape[1], P. Sperfeld[1], D. Friedrich[1], S. Winter[1], G. Hopfenmueller[2], and T. Weiss[2]
[1]Physikalisch-Technische Bundesanstalt Braunschweig und Berlin (PTB), 4.1 Photometry and Applied Radiometry, Braunschweig, Germany, [2]sglux GmbH, Berlin, Germany
„Characterization of SiC photodiodes for high irradiance UV radiometers Proceedings of NEWRAD 2011, edited by S. Park and E. Ikonen. (Aalto University, Espoo, Finland, 2011) *p. 203.*

B. Barton[1], P. Sperfeld[1], S. Nowy[1], A. Towara[1], A. Hoepe[1], S. Teichert[1], G. Hopfenmueller[2], M. Baer[3], and T. Kreuzberger[3]
[1]Physikalisch-Technische Bundesanstalt Braunschweig und Berlin (PTB), 4.1 Photometry and Applied Radiometry, Braunschweig, Germany, [2]sglux GmbH, Berlin, Germany, [3]SGIL Silicaglas GmbH, Langewiesen, Germany
„Characterization of new optical diffusers used in high irradiance UV radiometers Proceedings of NEWRAD 2011, edited by S. Park and E. Ikonen. (Aalto University, Espoo, Finland, 2011) p. 278.1.

Radiometer Guide

- **radiometric instruments for visualization and evaluation of data acquired by the sglux UV sensors**
- **graphic touch screen display (UVTOUCH and UV Control Pad)**
- **rugged version for harsh everyday use as reference radiometer or Windows based tablet computer**
- **miniature data loggers, one or two channels, up to two year of permanent logging with one battery**

sglux
The UV Experts

BostonElectronics

91 Boylston Street, Brookline, MA 02445
tel: (617)566-3821 fax: (617)731-0935
www.boselec.com boselec@boselec.com

UV Radiometers

Catalog

ABOUT SGLUX UV RADIOMETERS

UV sensors are used in industrial, research and development, and workplace safety applications. Frequently, the measurement signal generated by the sensor is sent directly to an instrument for display. For these applications, sglux produces top quality, high reliability UV radiometers with sensors tailored to the customer's requirements. These UV radiometers detect, measure, and store the UV sensor's signal and provide a wide range of operational features.

Product	Channels				Display	Dose Measure ment	Data Storage (Logger)	Sensors and features
	1	2	3	4				
UVRRM 	✓	✓			numeric			Any sglux UV sensor can be connected to the UVRRM. Sensor configured with a suitable plug.
UVPLOT 	✓				graphic	✓	✓	Any sglux UV sensor with USB connector. Can be connected to a local network.
UVMULTIPLOT 	✓	✓	✓	✓	graphic	✓	✓	Any sglux UV sensor with CAN connector. Can be connected to a local network.
UVTOUCH 	✓	✓			graphic	✓	✓	Any sglux UV sensor with CAN connector.
UVMICROLOG 	✓				none	✓	✓	One built-in sensor.
UVMINILOG 	✓	✓			none	✓	✓	One or two built-in sensors.
SENSORMONITOR 	✓	✓			alpha-numeric	✓	while connected to a computer	Any sglux UV sensor with voltage output and all photodiodes. Three fully programmable relay output terminals.

UV Radiometers

Catalog

BEGINNER - UVRRM

- UV reference radiometer
- Suitable for UV purifier sensor recalibration
- Any sglux UV sensor can be connected
- Low power consumption, long battery life

The **UVRRM** reference radiometer is an easy to use and rugged instrument. It can be connected to any sglux UV sensor type. It is used mainly for re-calibration of UV water purifier sensors. The **UVRRM** is ready to use immediately after powering on. Its low power consumption allows using it for years without changing the battery.

ALL-ROUNDER – UVPLOT

- UV radiometer based on a 8'' tablet computer
- Graphic display
- Datalogger and dosimeter
- Network-compatible, multi-channel

Do you need to display more than just the current radiation intensity? Do you need additional features such as a dosimeter function, datalogging, or seeing the intensity history to be plotted on the screen? The **UVPLOT** is a real all-round instrument for professionally displaying and processing radiation data. It can be connected to a local network via LAN or WiFi. A four-channel solution is available with the **UVMULTIPLOT**.

RUGGED PROFESSIONAL - UVTOUCH

- Two-channel UV radiometer
- Graphic display
- Datalogger and dosimeter
- Rugged metal housing

In harsh conditions of every day field or laboratory use the **UVTOUCH** is a reliable and true companion. Its robustness and versatility makes the **UVTOUCH** unique in the market. The **UVTOUCH** is a two-channel graphic intensity meter, dosimeter, and datalogger. The rugged metal housing even protects against hard impacts on hard floor.

UV Radiometers

Catalog

SIMPLE – UVMINILOG AND UVMICROLOG

- UV data logger for long-time monitoring
- with one or two UV sensors
- additional sensors e.g. temperature, pressure, relative humidity, illuminance (VIS) available
- Low power consumption, long battery life, waterproof

Do you need a simple, easy to use, and waterproof UV datalogger that stores the values and does nothing else? The tiny dataloggers, **UV MINILOG** and **UV MICROLOG**, perfectly match to this requirement. They are available with one or two UV sensors. The power consumption is very low and allows for two years of permanent logging without re-charging the battery.

PROGRAMMABLE - SENSORMONITOR

- Measurement and control module for monitoring and automation of irradiation processes
- Indication of radiation, dose, and status information
- Three programmable relays for automation of single and multi-level irradiation processes
- with two measurement inputs and USB/RS232 output

The **SENSORMONITOR** is a fully programmable measurement and control module with two sensor channels and three programmable relays. These relays switch on or off if a channel reaches or falls below a certain intensity value or if a certain dose is reached. It can be connected to a computer via USB/RS232. After programming, the **SENSORMONITOR** is a perfect control center for a small UV light source or to control sophisticated scientific experiments. The programming method is explained in a detailed manual. Alternatively, we are happy to do custom tailored programming.

UV Radiometers

Catalog

LIST OF PUBLICATIONS

P. Sperfeld[1], B. Barton[1], S. Pape[1], A. Towara[1], J. Eggers[2], G. Hopfenmueller[3]
[1]Physikalisch-Technische Bundesanstalt Braunschweig und Berlin (PTB), Germany, [2]DVGW-Technologiezentrum Wasser, Karlsruhe, Germany, [3]sglux GmbH, Berlin, Germany
„Spectral irradiance measurement and actinic radiometer calibration for UV water disinfection“
Metrologia, Issue 51 (2014), *p. 282-288.*

P. Sperfeld[1], B. Barton[1], S. Pape[1], A. Towara[1], J. Eggers[2], G. Hopfenmueller[3]
[1]Physikalisch-Technische Bundesanstalt Braunschweig and Berlin (PTB), Germany, [2]DVGW-Technologiezentrum Wasser, Karlsruhe, Germany, [3]sglux GmbH, Berlin, Germany
„Spectral Irradiance Measurement and Actinic Radiometer Calibration for UV Water Disinfection
Proceedings of NEWRAD 2014, edited by S. Park, P. Kaerhae and E. Ikonen. (Aalto University, Espoo, Finland 2014) *p. 128.*

B. Barton[1], P. Sperfeld[1], A. Towara[1], G. Hopfenmueller[2]
[1]Physikalisch-Technische Bundesanstalt Braunschweig und Berlin (PTB), 4.1 Photometry and Applied Radiometry, Braunschweig, Germany, [2]sglux GmbH, Berlin, Germany
„Developing and setting up a calibration facility for UV sensors at high irradiance rates
EMEA Regional Conference, Karlsruhe, Germany (2013)

P. Sperfeld[1], B. Barton[1], S. Pape[1], G. Hopfenmueller[2]
[1]Physikalisch-Technische Bundesanstalt Braunschweig und Berlin (PTB), 4.1 Photometry and Applied Radiometry, Braunschweig, Germany, [2]sglux GmbH, Berlin, Germany
„Traceable spectral irradiance measurements at UV water disinfection facilities
EMEA Regional Conference, Karlsruhe, Germany (2013)

G. Hopfenmueller[1], T.Weiss[1], B. Barton[2], P. Sperfeld[2], S. Nowy[2], S. Pape[2], D. Friedrich[2], S. Winter[2], A. Towara[2], A. Hoepe[2], S. Teichert[2]
[1]sglux GmbH, Berlin, Germany, [2]Physikalisch-Technische Bundesanstalt Braunschweig und Berlin (PTB), 4.1 Photometry and Applied Radiometry, Braunschweig, Germany
„PTB traceable calibrated reference UV radiometer for measurements at high irradiance medium pressure mercury discharge lamps
EMEA Regional Conference, Karlsruhe, Germany (2013)

D. Prasai[1], W. John[1], L. Weixelbaum[1], O. Krueger[1] G. Wagner[2], P. Sperfeld[3], S. Nowy[3], D. Friedrich[3], S. Winter[3] and T. Weiss[4]
[1]Ferdinand-Braun-Institut, Leibniz-Institut fuer Hoechstfrequenztechnik, Berlin, Germany, [2]Leibniz-Institut fuer Kristallzuechtung, Berlin, Germany, [3]Physikalisch-Technische Bundesanstalt Braunschweig und Berlin (PTB), 4.1 Photometry and Applied Radiometry, Braunschweig, Germany, [4]sglux GmbH, Berlin, Germany
„Highly reliable silicon carbide photodiodes for visible-blind ultraviolet detector applications
J. Mater. Res., first view (2012)
Copyright © Materials Research Society 2012. Personal use of this material is permitted. However, permission to reprint/republish this material for advertising or promotional purposes or for creating new collective works for resale or redistribution to servers or lists, or to reuse any copyrighted component of this work in other works must be obtained from the Cambridge University Press.

S. Nowy[1], B. Barton[1], S. Pape[1], P. Sperfeld[1], D. Friedrich[1], S. Winter[1], G. Hopfenmueller[2], and T. Weiss[2]
[1]Physikalisch-Technische Bundesanstalt Braunschweig und Berlin (PTB), 4.1 Photometry and Applied Radiometry, Braunschweig, Germany, [2]sglux GmbH, Berlin, Germany
„Characterization of SiC photodiodes for high irradiance UV radiometers
Proceedings of NEWRAD2011, edited by S. Park and E. Ikonen. (Aalto University, Espoo, Finland, 2011) *p. 203.*

B. Barton[1], P. Sperfeld[1], S. Nowy[1], A. Towara[1], A. Hoepe[1], S. Teichert[1], G. Hopfenmueller[2], M. Baer[3], and T. Kreuzberger[3]
[1]Physikalisch-Technische Bundesanstalt Braunschweig und Berlin (PTB), 4.1 Photometry and Applied Radiometry, Braunschweig, Germany, [2]sglux GmbH, Berlin, Germany, [3]SGIL Silicaglas GmbH, Langewiesen, Germany
„Characterization of new optical diffusers used in high irradiance UV radiometers
Proceedings of NEWRAD2011, edited by S. Park and E. Ikonen. (Aalto University, Espoo, Finland, 2011) p. 278.1.





AQUA
UV TOUCH

Ultraviolet (UV) Calibration

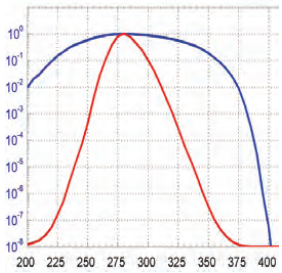

- **Calibration service according to guidance DAkkS-DKD-MB-3 and DIN/ISO 17025**
- **Traceability to NIST or PTB**
- **Determination of the spectral responsivity of UV sensors**
- **Determination of the UV transmission**
- **Determination of the temperature dependency of UV sensors**

sglux
The UV Experts

BostonElectronics

91 Boylston Street, Brookline, MA 02445
tel: (617)566-3821 fax: (617)731-0935
www.boselec.com boselec@boselec.com

UV Calibration

Catalog

sglux
The UV Experts

WHAT IS CALIBRATION?

Calibration is the reliable and reproducible determination and documentation of a measurement value deviation in comparison to a standard. If the used standard is traceable and the deviation and the measurement uncertainty is determined, the procedure is a traceable calibration. The traceable standard is conducted to the definition of the SI units by an uninterrupted calibration chain.

HOW DOES A CALIBRATION LABORATORY WORK?

A calibration laboratory ensures the performance of examinations and calibrations on good practice under controlled conditions. Therefore the allocation of qualified personnel, appropriate measurement instrumentation and necessary infrastructure is required. Doing UV calibration, different interplays of sources, reference sources, spectrometers, radiometers and reference radiometers are to be analyzed.

OUR SERVICES

The UV calibration work at sglux determines the spectral responsivity of UV irradiance sensors, integral irradiance sensitivity of UV irradiance sensors, spectral emission spectrum of UV sources and transmission. We have done this service since 2010 according to guidance DAkkS-DKD-MB-3, and our calibration laboratory is ISO 9001 certified. Following our goal of continuous improvement, we have since 2010 cooperated with the German PTB (Department of Photometry and Applied Radiometry) in several R&D projects continuing until 2017. For 2018 we seek the ability of being accredited according to DIN 17025. Our mission is to deliver detailed property information along the UV measurement components we produce.

CALIBRATION PROCESS

Calibrations are performed after determination of the customer's requirements, the field of application and the specific environmental conditions while using the UV measurement components.Our calibration laboratory uses different traceable transfer standards for the determination of the spectral responsivity and the integral irradiance sensitivity of sensors at different UV sources. The typical delivery time for a calibration is two weeks after clarification of technical details and, if necessary, the consignment of detectors or emitters.

CALIBRATION 1

Determination of the absolute spectral responsivity of sglux sensors incl. calibration certificate according to guidance DAkkS-DKD-MB-3 and DIN/ISO 17025.

CALIBRATION 2

Irradiance calibration of an sglux UV sensor for measurements at a specific UV source incl. calibration certificate according to DAkkS-DKD-MB-3 and DIN/ISO 17025.

SiC UV Spectrometer

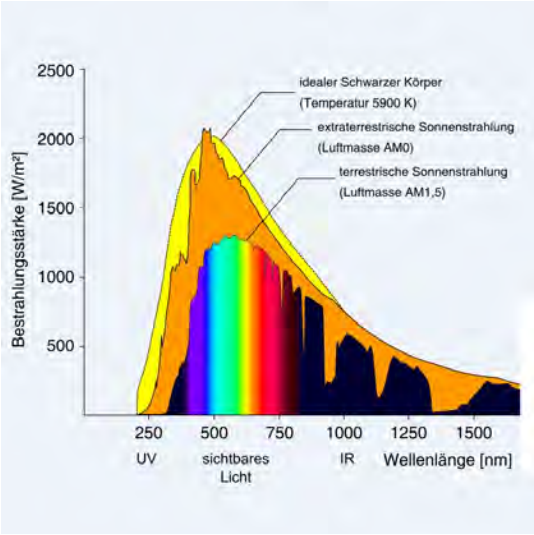

- **world's first SiC based UV spectrometer**
- **The high visible blindness of SiC now allows precise UV spectrometry in the presence of strong visible radiation (no stray light effects).**
- **SiC's high radiation hardness and low dark current create an enhanced dynamic range compared with Si-photodiode based spectrometers.**

sglux
The UV Experts

BostonElectronics

91 Boylston Street, Brookline, MA 02445
tel: (617)566-3821 fax: (617)731-0935
www.boselec.com boselec@boselec.com

UV Spectrometers

Catalog

sglux
The UV Experts

SIC UV SPECTROMETERS

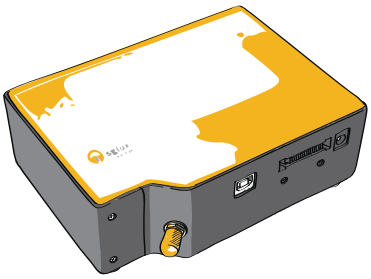

Together with the Berlin Ferdinand Braun Institute sglux does R&D in the area of the development of the word's first UV-spectrometers that base on the semiconductor detector material Silicon Carbide. The advantage of such kind of UV spectrometers result from the extreme radiation hardness and very high visible blindness of SiC compared with Si based UV spectrometers leading to zero stray light effects caused by visible light.

This new spectrometer technology allows precise UV spectrometry also at presence of strong visible light such as UV measurements in the bright sun or under room light. Another advantage of the SiC UV spectrometer results from the high radiation hardness and low dark current of this material. This features lead to a broader dynamic range of the spectrometer compared with conventional Si based spectrometers.

FIRST PRODUCT "UV LINESIC128"

A first product of this new series is available (as a pre-series version). Development work on this new series is still ongoing aim to achieve higher resolution and smaller size.

Features of the UV lineSiC128 are:

- 128 pixel
- wavelength sensititvity range 200...385 nm
- wavelength resolution 2.3 nm/pixel (down to 0.4 nm/pixel under development with optimized grating and doubling of pixel number)
- intensity readings: 16 Bit resolution (20 Bit under development)
- dynamic range:
  1.5 orders via integrator ranges,
  3 orders by integration time (up to 5 orders under development)
- direct sunlight measurements possible
- very low degradation of detector either at high UV intensities (compared to UV enhanced Si-based spectrometers)

UV-Index Measurement

- **Photodiodes for measurement of the UV Index, various optics and detector chip areas**
- **UV sensors (TOCONs) with 0 to 5 V voltage output for measurement of the UV Index, various optics**
- **UV sensor probes for measurement of the UV Index, cosine field of view**

sglux
The UV Experts

BostonElectronics

91 Boylston Street, Brookline, MA 02445
tel: (617)566-3821 fax: (617)731-0935
www.boselec.com boselec@boselec.com

UV-Index Measurements

Catalog

sglux
The UV Experts

DEFINITION OF THE UV-INDEX

The UV Index is defined by ISO 17166 and quantifies the risk of sunburn (Erythema Solare) at a given solar UV exposure spectrum. Please check the video at the right column of this page for further information.

APPROACHES TO MEASURE THE UV INDEX

Precise measurement of the UV Index is usually based on data generated by spectrometers. These spectrometers measure the ultraviolet spectrum of the sun. Subsequently the UV Index is calculated by multiplication and integration of this spectrum with the human skin's erythema action curve. A handy alternative to spectrometer based UV Index measurement is using radiometers such as photodiode based integrating sensors. This method requires precision matching of the photodiode's spectral responsivity with the erythema action curve of the human skin and a cosine field of view. This precision is needed because the spectrum of the source (the sun) varies strongly depending on time of day, place, date, clouds, shadow and the local ozone layer thickness. A radiometer sold as an "UV Index Sensor" that does not precisely match the erythema action curve is not a valid UV Index Sensor, it is just a UV Sensor. As a result of many years of R&D the sglux ERYCA UV Index sensors nearly perfectly match the erythemal action curve. The mean error is 1.3% only.

SGLUX ERYCA RADIOMETER BASED GLOBAL METEOROLOGICAL NETWORK

Since 2014 Berlin's first UV Index measuring station works on the roof of sglux's building. This station bases on a UV Index sensor probe ("UV-Cosine_UV-Index") and a LAN transmitter module ("SKYLINK UV-transmitter"). Since October 2015 a duplicate station works in the Southern hemisphere, in Florianopolis, a city in the South of Brasil. On our website the values of these two stations are displayed.

OUR PRODUCTS

Our components and systems for measurement of the UV Index are listed on page 2. It starts with a selection of UV-Index photodiodes (external amplifier needed). Easiest to use components are the UV-Index TOCONs (photodiodes with internal amplifier for 0 to 5V voltage output). The sglux UV-Cosine_UV-Index probe is a waterproof sensor ready-to-mount outdoors with cosine field of view. To display and control the sensor's signal sglux offers the UVTOUCH and UV Control Pad displays as well as datalogger units. Our "SYKLINK UV transmitter" unit converts the sensor's signal into a web graph and transmits this graph to one or more multiple webpages. All items will be delivered calibrated on request.
Contact sglux and discover YOUR opportunities to precisely detect and report the sun's UV-Index.

UV-Index Measurements

Catalog

sglux
The UV Experts

PHOTODIODES AND SENSORS (MEASUREMENT MEAN ERROR ‹ 1.3%)

SiC UV photodiodes

UV-Index photodiodes, different active chip areas and housings, with erythema filter

SiC TOCONs

UV-Index hybrid sensor in a TO5 housing with 0 - 5 V signal output, with erythema filter

TOCON_PTFE24V_UVI

UV-Index hybrid sensor (TOCON) in PTFE housing (male thread M12x1), EMC safe, with erythema filter

TOCON_UVI

UV-Index hybrid sensor (TOCON) in PTFE housing (with G1/4" thread), EMC safe, with erythema filter

UV-Surface_UVI

top looking surface-mount UV sensor probe with cosine FOV, EMC safe, with erythema filter

UV-Cosine_UVI

waterproof UV-Index sensor probe with cosine FOV, EMC safe, for outdoor use, with erythema filter

UV-INDEX DISPLAYS AND NETWORK COMPUTERS

UV-Index reference radiometer

Reference radiometer for UV-Index measurements, incl. calibrated (PTB traceable) UVI sensor probe

Skylink UV transmitter

network computer with UV-Index sensor

UV Solutions from Boston Electronics and sglux

Thank you for your interest in our **UV detection solutions**. In this catalog, you will find dedicated sections describing the full breadth of **sglux'** product offerings. In this catalog you will find discussions on the applications, tutorials on the technology and UV measurements, and information on sensor selection. The enclosed information should allow you to appropriately select the sensor you need for your specific application.

Sections:

- SiC UV Photodiodes
- UV TOCONS
- UV Probes
- Displays
- UV Calibration
- UV Spectrometer
- UV-Index Measurement

If you wish to look at a specific data sheet, please go to our website. Also, do not hesitate to contact our applications staff so that they can answer any questions you have, and provide a quotation.

If you also have a need for **UV Light Emitting Diodes (UV LEDs)** please see our web site. We carry high performance, affordable solutions from **Nikkiso**.